PFAFF® Industrial

POWERLine

2521 PREMIUM

SERVICE MANUAL

This service manual applies to machines from software version **0389/002** and serial number **2 788 828** onwards →

296-12-19 156/002
Justieranleitung engl. 04.12

PFAFF Industriesysteme
und Maschinen AG

Hans-Geiger-Str. 12 - IG Nord
D-67661 Kaiserslautern

Contents ..... Page

1	**Adjustment**	**4**
1.01	Notes on adjustment	4
1.02	Tools, gauges and other accessories for adjusting	4
1.03	Abbreviations	4
1.04	Explanation of the symbols	4
1.05	Adjusting the basic machine	5
1.05.01	Basic position of the balance wheel (adjustment aid)	5
1.05.02	Balance weight	6
1.05.03	Needle position in the direction of sewing	7
1.05.04	Limiting the needle bar frame	8
1.05.06	Preliminary adjustment of the needle height	9
1.05.06	Needle rise, hook clearance, needle height and needle guard	10
1.05.07	Bobbin case opener	11
1.05.08	Feed wheel	12
1.05.09	Clearance between roller presser and feed wheel	13
1.05.10	Roller-presser	14
1.05.11	Bobbin winder	15
1.05.12	Thread check spring and thread regulator	16
1.05.13	Sewing foot pressure	17
1.05.14	Lubrication	18
1.05.15	Re-engaging the slip-clutch	19
1.06	Adjusting the thread trimmer -900/81	20
1.06.01	Resting position of roller lever/radial position of control cam	20
1.06.02	Position and height of the thread catcher	21
1.06.03	Knife pressure	22
1.06.04	Bobbin thread clamp spring	23
1.06.05	Manual cutting test	24
1.07	List of parameters for control P320 / P321	25
1.08	Error Messages and Description	29
1.09	Motor Errors	30
1.10	Updating the machine software via internet	31
1.10.01	Updating 2521 with null modem cable	31
1.10.02	Updating 2521with SD card	32
2	**Circuit diagrams**	34

1 Adjustment

Please observe all notes from Chapter **1 Safety** of the instruction manual!
In particular care must be taken to see that all protective devices are refitted properly after adjustment, see Chapter **1.06 Danger warnings** of the instruction manual!

If not otherwise stated, the machine must be disconnected from the electrical power supply. Danger of injury due to unintentional starting of the machine!

1.01 Notes on adjustment

All following adjustments are based on a fully assembled machine and may only be carried out by expert staff trained for this purpose.
Machine covers, which have to be removed and replaced to carry out checks and adjustments, are not mentioned in the text.
The order of the following chapters corresponds to the most logical work sequence for machines which have to be completely adjusted. If only specific individual work steps are carried out, both the preceding and following chapters must be observed.
Screws, nuts indicated in brackets ( ) are fastenings for machine parts, which must be loosened before adjustment and tightened again afterwards.

1.02 Tools, gauges and other accessories for adjusting

- Screwdrivers with blade width from **2** to **10 mm**
- Spanners (wrenches) with jaw width from **7** to **14 mm**
- **1** set Allen keys from **1.5** to **6 mm**
- Setting gauge (Needle position in sewing direction Order No. **61-111 641-48**)
- Step gauge
- Metal rule (part No. **08-880 218-00**)
- Sewing thread and test materials

1.03 Abbreviations

t.d.c. = top dead centre
b.d.c. = bottom dead centre

1.04 Explanation of the symbols

In this adjustment manual, symbols emphasize operations to be carried out or important information. The symbols used have the following meaning:

Note, information

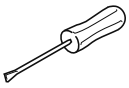

Service, repair, adjustment, maintenance
(work to be carried out by qualified staff only)

1.05 Adjusting the basic machine

1.05.01 Basic position of the balance wheel (adjustment aid)

Requirement
When the needle bar is positioned at t.d.c., the marking "**0**" on the scale should be level with the top edge of the belt guard (see arrow).

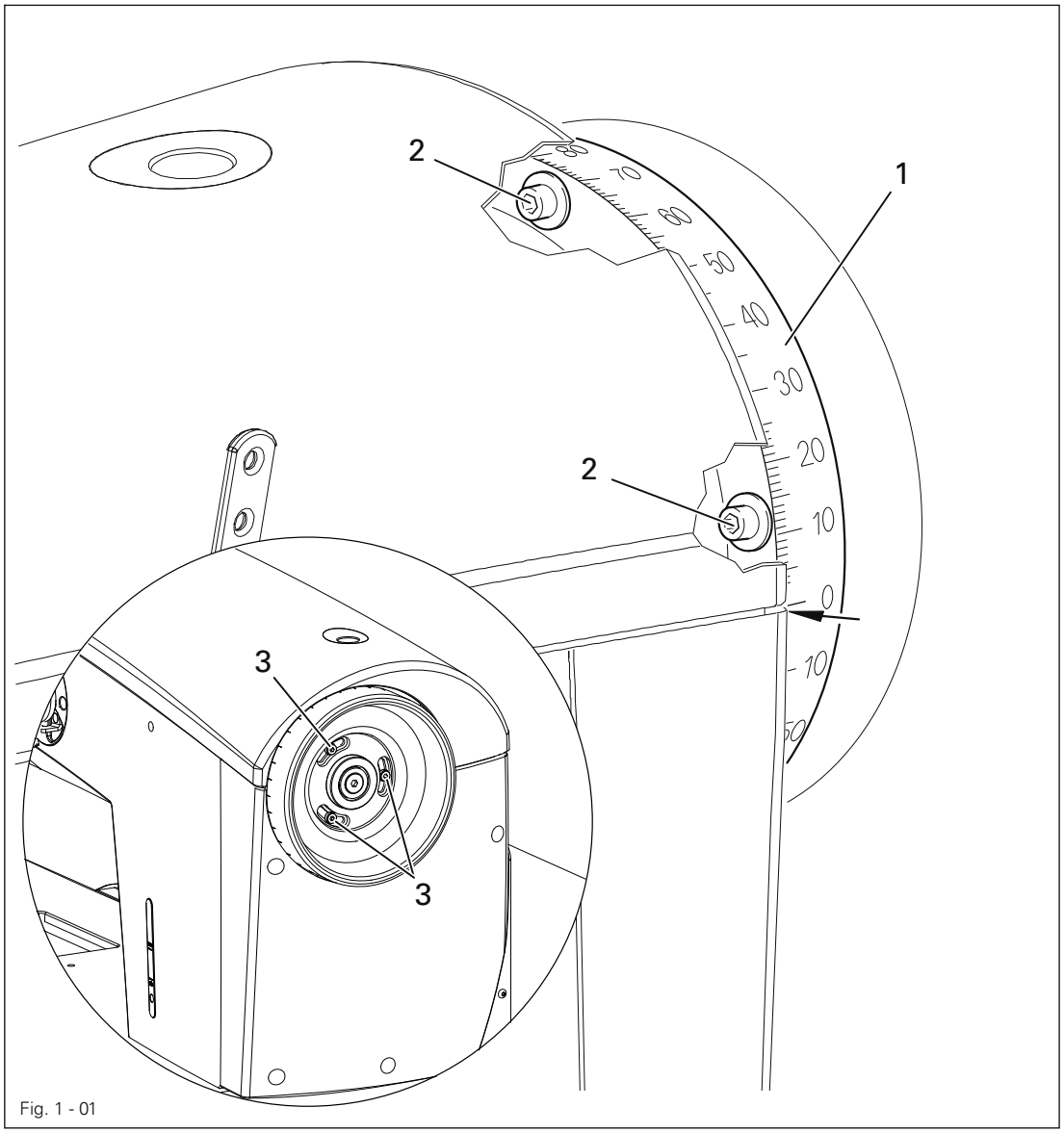

Fig. 1 - 01

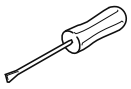

- Adjust the scale dial **1** (screws **2** or **3** depending upon execution) accordance with the **requirement**.

1.05.02 Balance weight

Requirement
When the needle bar is positioned at b.d.c. (balance wheel position **180**°) the largest eccentricity of the balance weight **1** should be at the top.

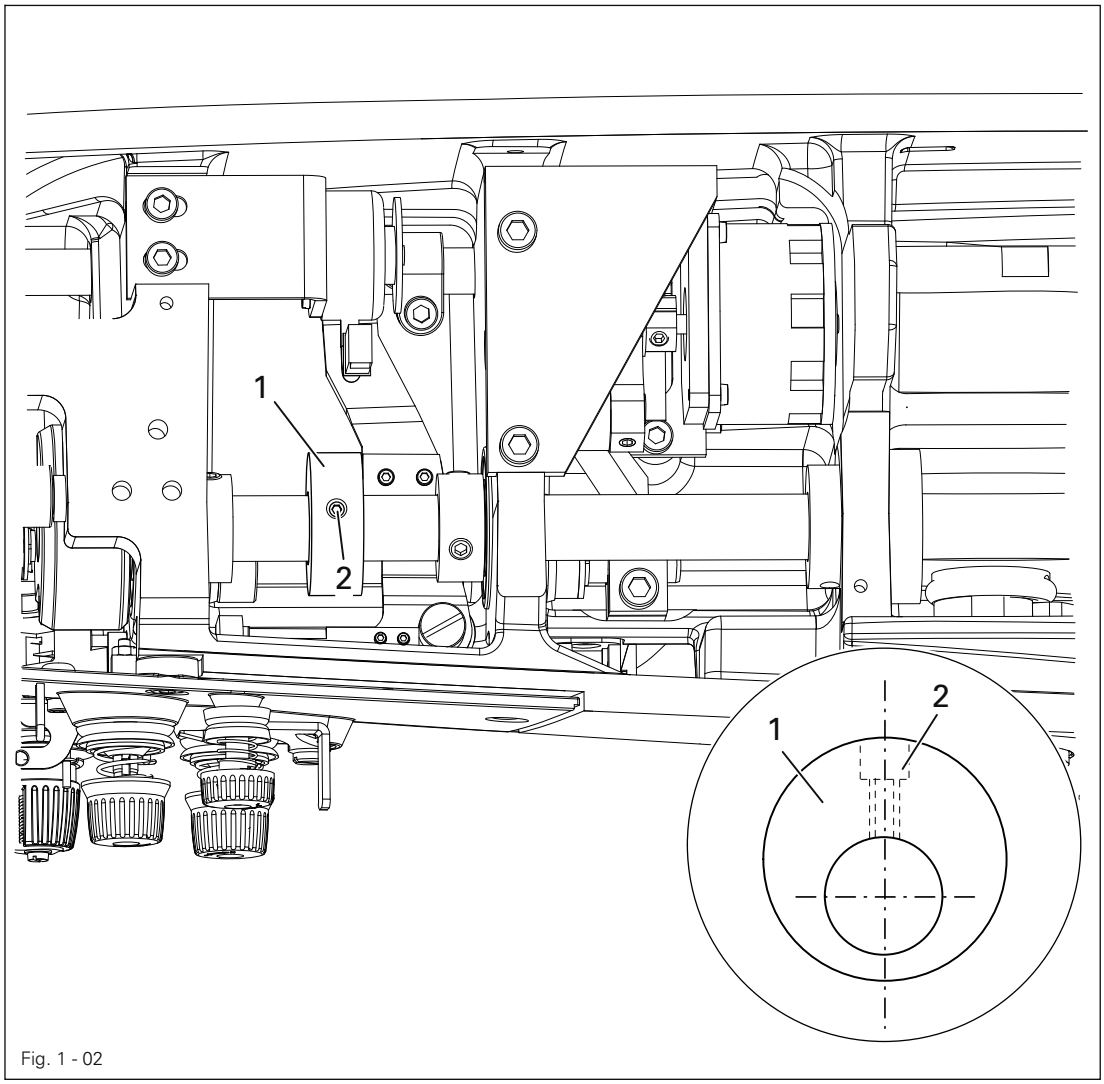

Fig. 1 - 02

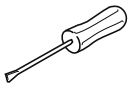

- Adjust balance weight **1** (screw **2**) in accordance with the **requirement**.

1.05.03 Needle position in the direction of sewing

Requirement
With the stitch length set at "**5**", in its front and rear point of reversal the needle should be the same distance from the inside edges of the needle hole.

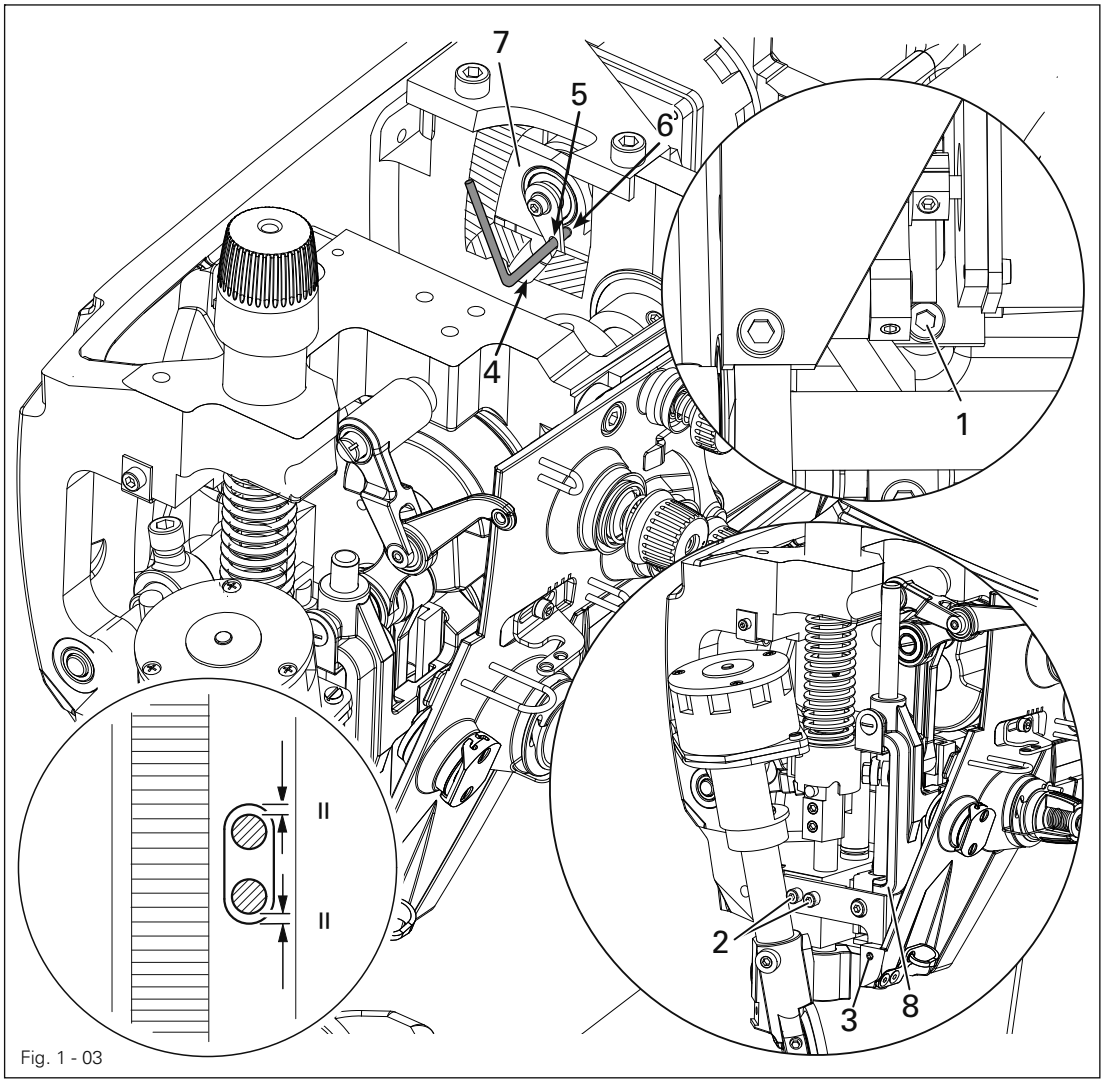

Fig. 1 - 03

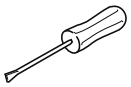

- Turn on machine and set stitch length to "**5**".
- Turn machine off and on (synchronise needle bar to stitch length).
- Sew a stitch and check the rear position of the needle according to the requirement.
- Press the stitch control key, sew a stitch and check the forward position of the needle according to the requirement and where necessary make the following adjustments.
- Turn off machine and loosen screws **1**, **2** and **3**.
- Push the adjusting pin's angled part (Order No. **61-111 641-48** through hole **4** and **5** into the hole **6** of the bearing block **7**.
- Move the needle bar frame **8** according to the requirement and tighten screw **1**.
- Check according to the requirement.
- Screws **2** and **3** remain loosened for the subsequent adjustment.

1.05.04 Limiting the needle bar frame

Requirement
With the stitch length set at "**5**", when the needle is in its front and rear point of reversal screw **4** should be the same distance from the inside edge of its hole.

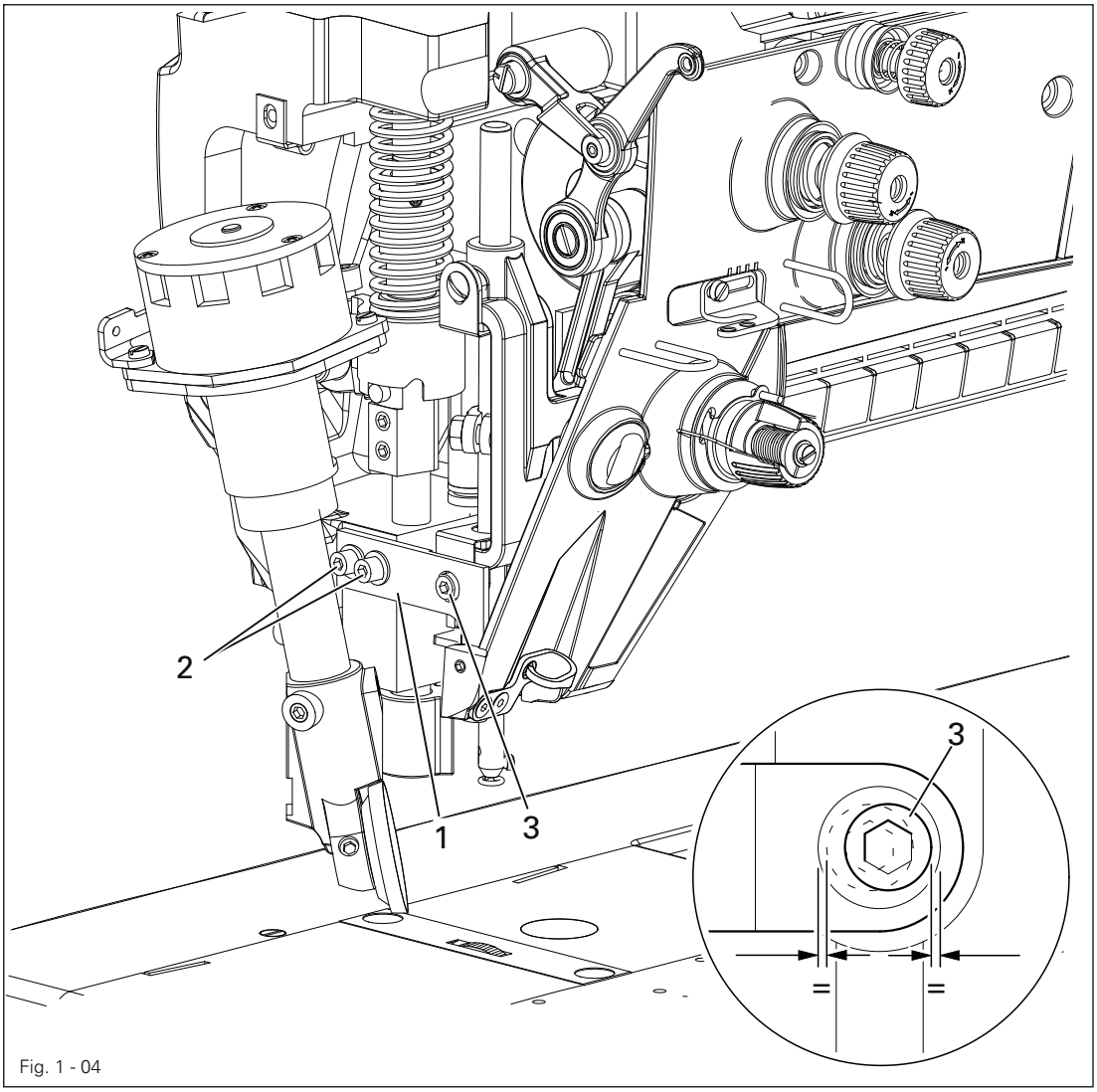

Fig. 1 - 04

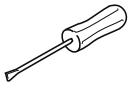

- Set stitch length to "**5**".
- Select parameter **605**.
- Turn the handwheel in the direction of rotation and check the "requirement".
- If necessary move regulating bow **1** (screw **2** and **3**).

1.05.06 Preliminary adjustment of the needle height

Requirement
When the needle bar is positioned at t.d.c. (handwheel position **0°**) there should be a gap between upper edge needle bar and upper edge needle pendulum of about **40 mm.**

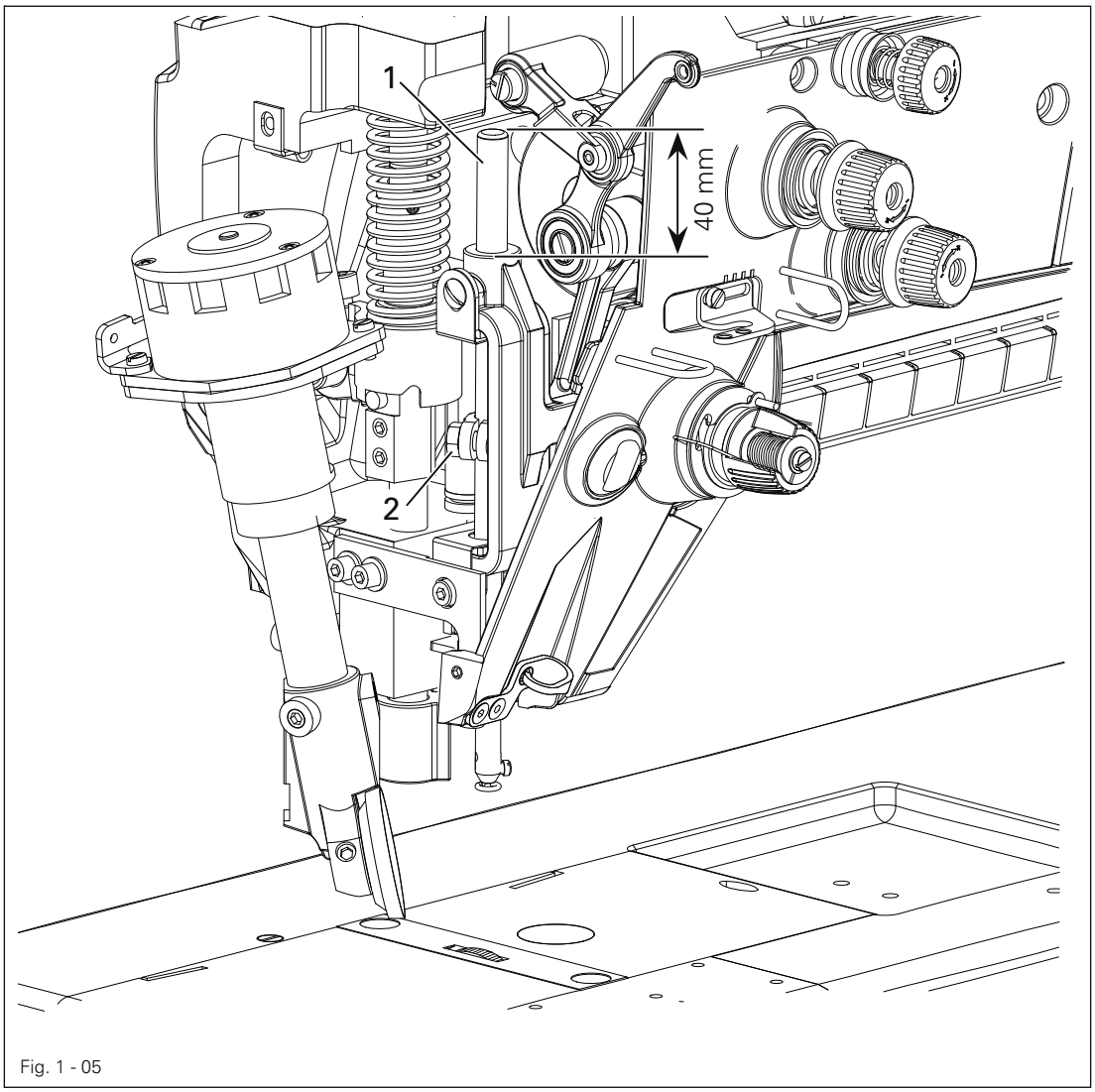

Fig. 1 - 05

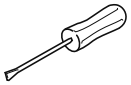

- Without turning it, re-position needle bar **1** (screw **2**) in accordance with the **requirement**.

1.05.06 Needle rise, hook clearance, needle height and needle guard

Requirement
With the stitch length set at "**4.0**" and in the needle rise position **2,0 mm** b.d.c. (= Balance wheel position **202°**):

1. the hook point **6** should be positioned at "needle centre" with a hook-to-needle clearance of **0.05 – 0.10 mm**.
2. the top of the needle eye should be positioned **0.8 mm** below hook point **6**
3. and needle guard **7** must touch the needle just lightly.

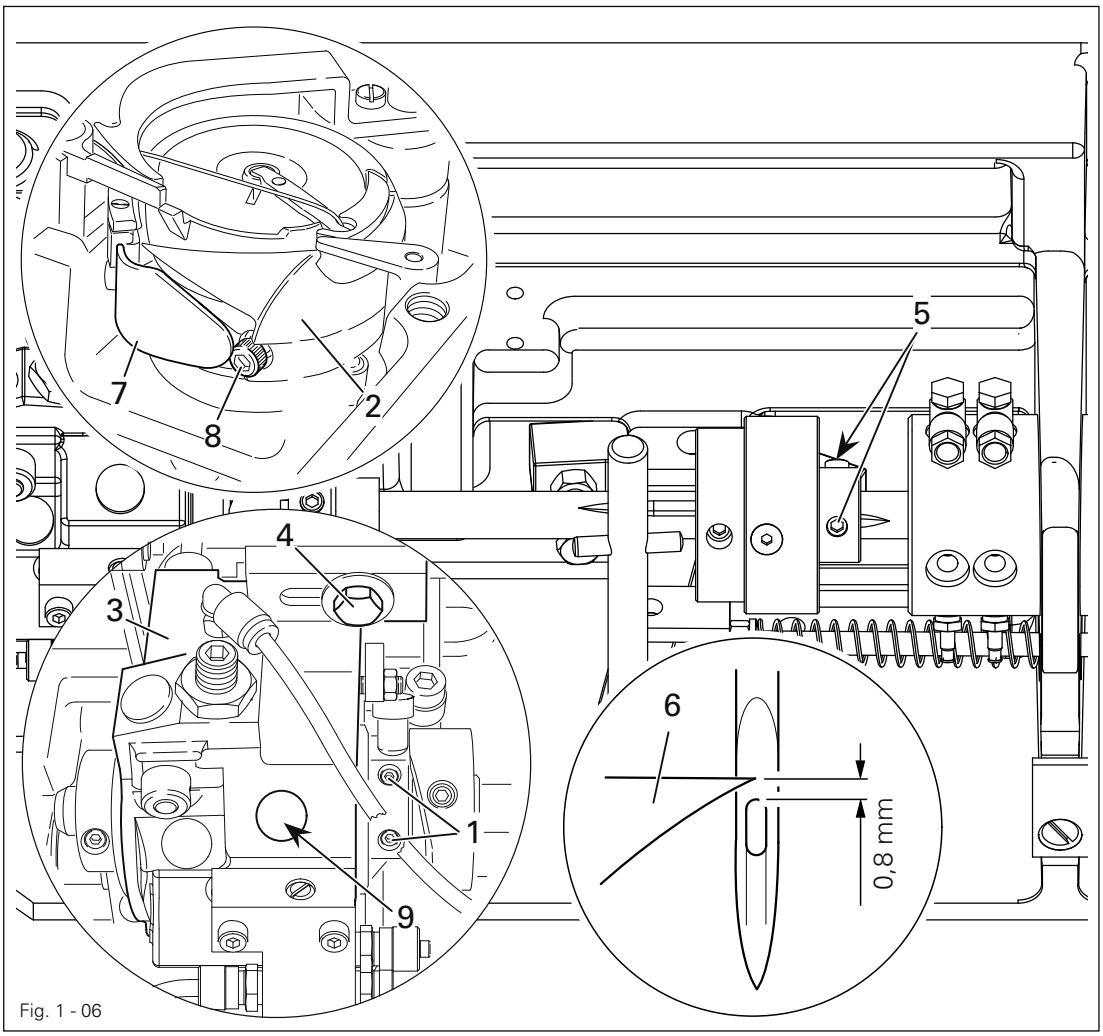

Fig. 1 - 06

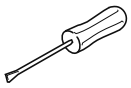

- Loosen both screws **1** to the hook **2**.
- Adjust hook **2** and hook bearing **3** (screws **4** and **5**) in accordance with **requirement 1**.
- Without turning it, re-position the needle bar in accordance with the **requirement 2**, also see Chapter **1.05.08 Preliminary adjustment of the needle bar.**
- Adjust needle guard **7** (screw **8**) in accordance with **requirement 3**.
- Set a low cog clearance for screw **9**.

If the needle size is changed, a quick adjustment of hook bearing **3** is possible, after loosening screws **4** and **5**.

1.05.07 Bobbin case opener

Requirement

1. When turning the handwheel, the horn **4** should be lifted off the stitch platen **5** on the right turning point of the bobbin lift **1** by the thread thickness.
2. Bobbin lift upper edge, and lower bobbin upper edge should be at same level.
3. Bobbin lift **1** should be in the right turning point at handwheel position "**300°**".
4. Screw **7** to the return spring of the bobbin lift should be positioned approx. **10** mm above the lock nut **8**.

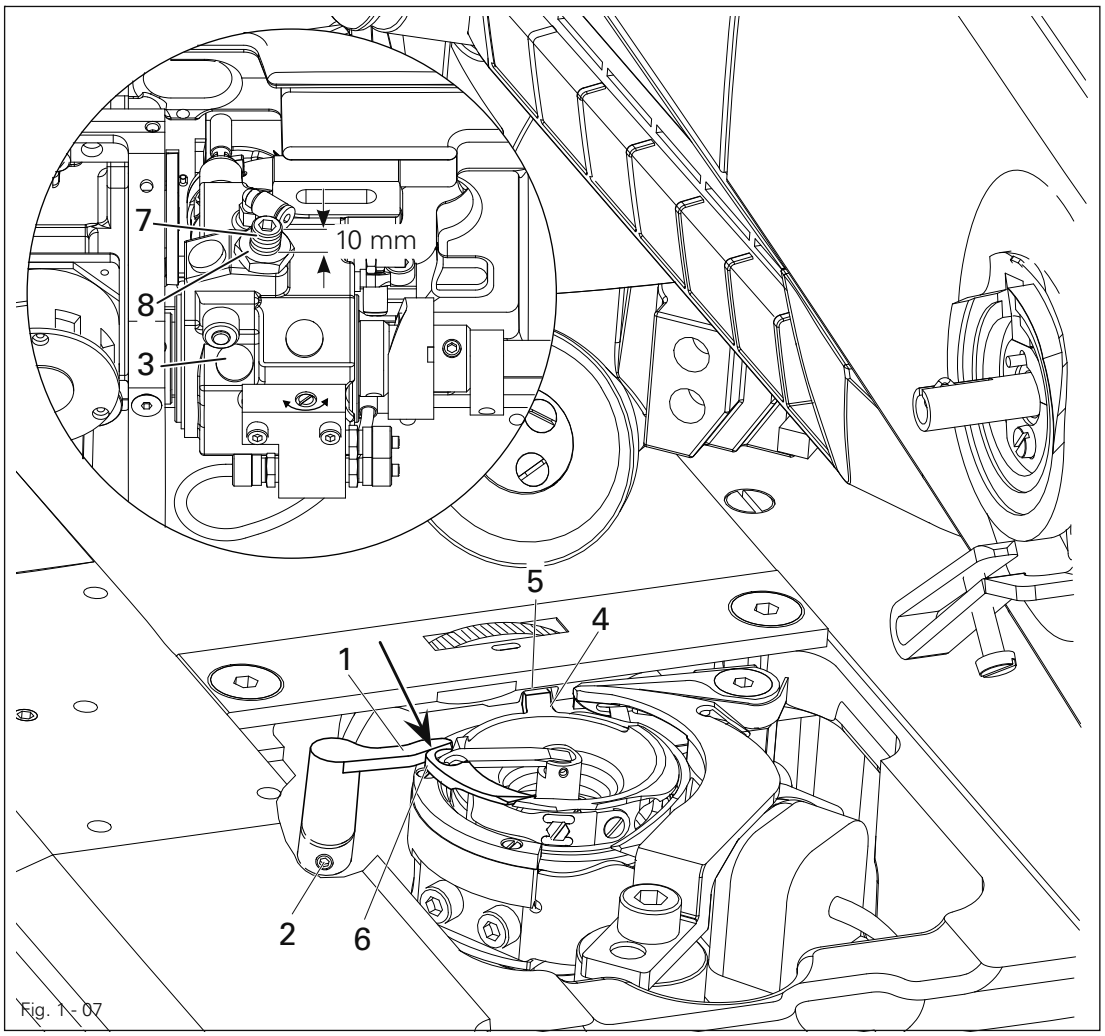

Fig. 1 - 07

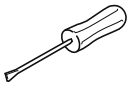

- Bobbin lift **1** (screw **2**) must be turned and moved according to requirements **1** and **2**.
- Excenter (screw under cover **3**) must be turned in accordance with requirement **3**.
- Adjust screw **7** (nut **8**) in accordance with requirement **4**.

The thread must pass freely between bobbin lift **1** and bobbin case **6**.

1.05.08 Feed wheel

Requirement

1. The feed wheel should be crossways to the sewing direction in the centre of the needle plate recess.
2. The teeth of the cogwheel should be **0.5** - **0.8** mm above the upper edge of the needle plate, depending on fabric

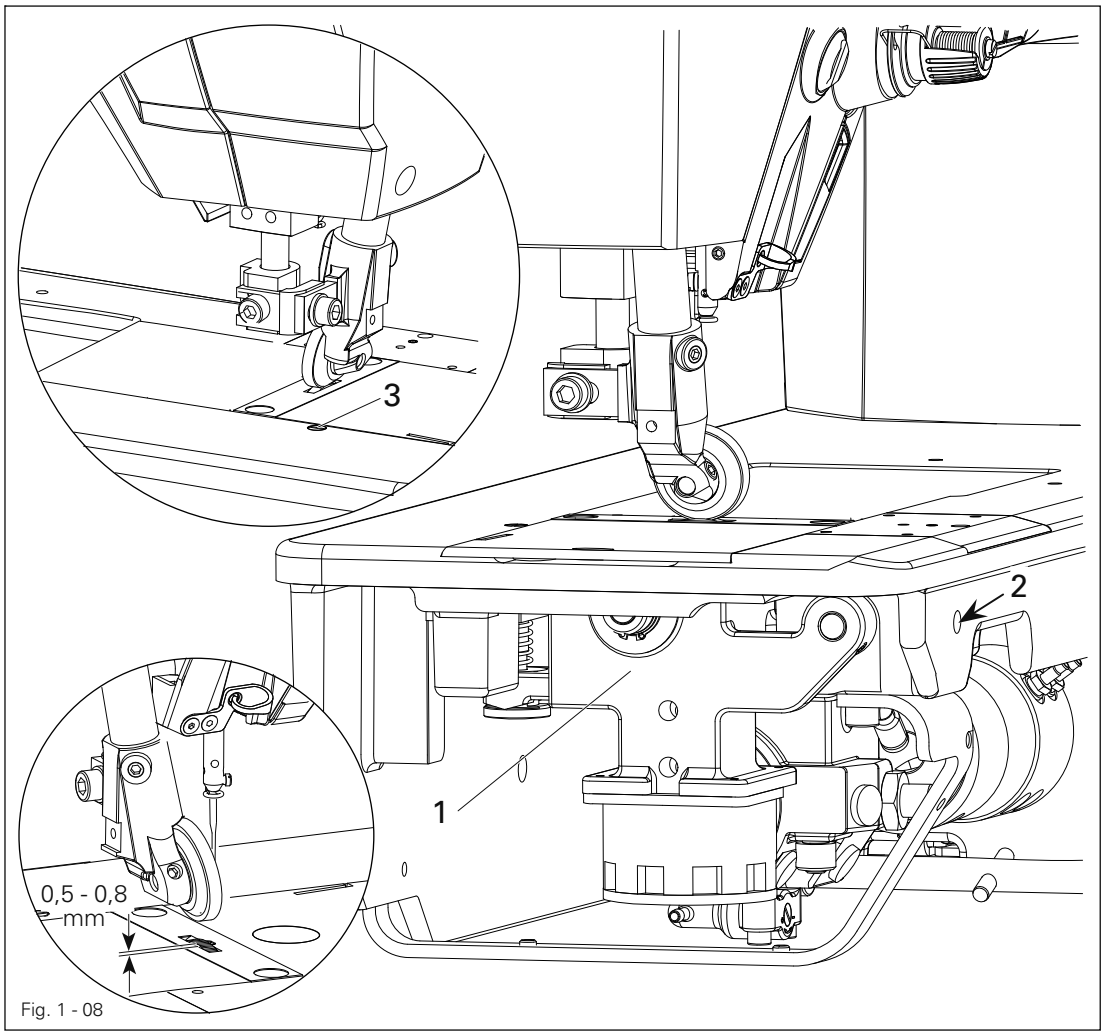

Fig. 1 - 08

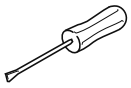

- Move feed wheel drive **1** (screw **2**) according to rule **1**.
- Turn screw **3** according to rule **2**

1.05.09 Clearance between roller presser and feed wheel

Requirement

1. With a resting roller-presser there should be a gap between the lift piece **1** and the housing of about **2 mm**.
2. With a raised roller-presser the distance between roller-presser and needle plate should be **8mm**.

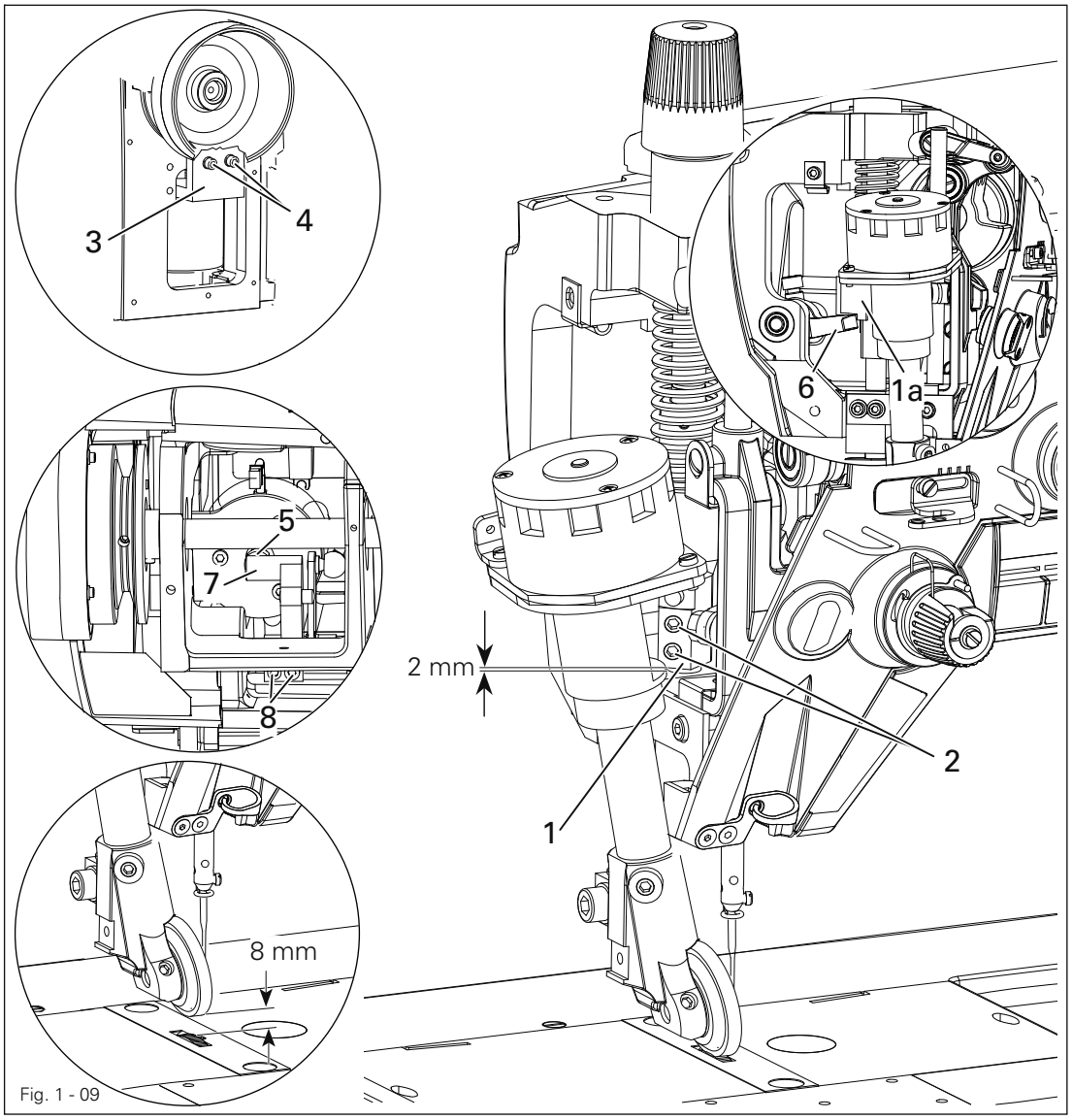

Fig. 1 - 09

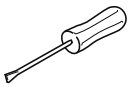

- Set the roller-presser down on the needle plate.
- Decrease roller-presser pressure.
- Adjust lift piece **1** (screws **2**) according to the requirement **1**.
- Push magnet bracket **3** (screws **4**) downwards as far as it will go.
- Raise the roller-presser and place an **8mm** gauge under the roller-presser.
- With magnet plunger **5** extended, move lever **6** up against lift piece **1**a and mount lever **7** (screws **8**) on to magnet plunger **5**.
- Check according to the requirement.

1.05.10 Roller-presser

Requirement

When the roller-presser **1** is resting on the feed wheel **6** it must

1. be parallel to the feed wheel **6** when viewed in the direction of sewing,
2. be in the middle of the (needle when viewed in the direction of sewing and
3. be as close as possible to the needle when viewed in transverse direction of sewing.

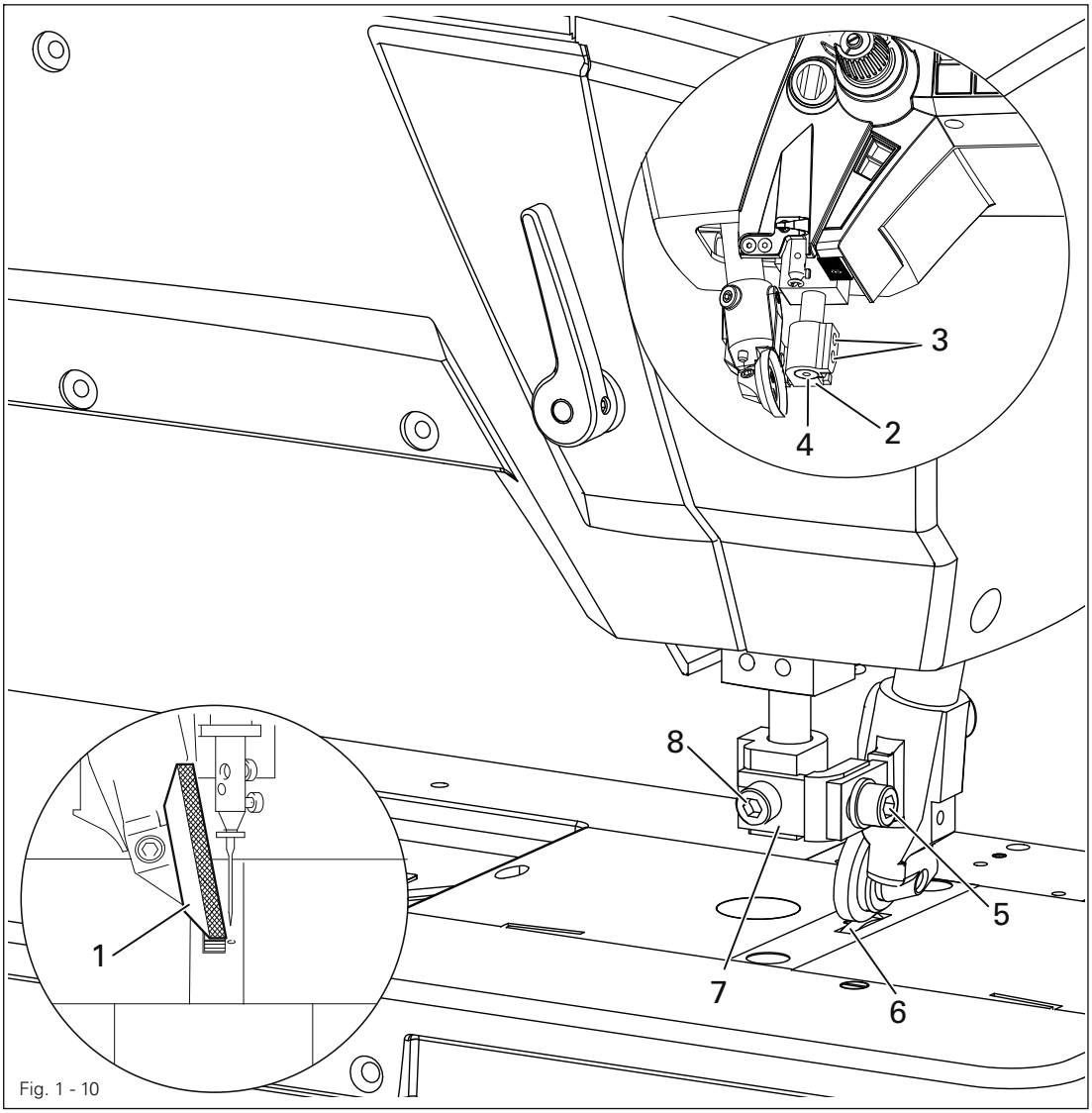

Fig. 1 - 10

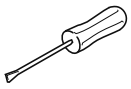

- Raise the roller-presser **1**.
- Place roller-presser bracket **2** (screws **3**) flush to the bottom edge of presser bar **4**.
- Always observe **requirement 1** when carrying out the following adjustments.
- Move the roller-presser **1** (screw **5**) in accordance with **requirement 2**.
- Allow the roller-presser **1** to come to rest on the feed wheel **6**.
- Move bracket **7** (screw **8**) according to requirement **3**.

When sewing very tight curves the roller-presser **1** should be moved toward the operator slightly.

1.05.11 Bobbin winder

Requirement

1. When the bobbin winder is engaged, the winding spindle must be driven reliably. When it is disengaged, friction wheel **3** should not be touching drive wheel **1**.
2. When it is switched off, the bobbin winder must click securely into its end position (knife raised).

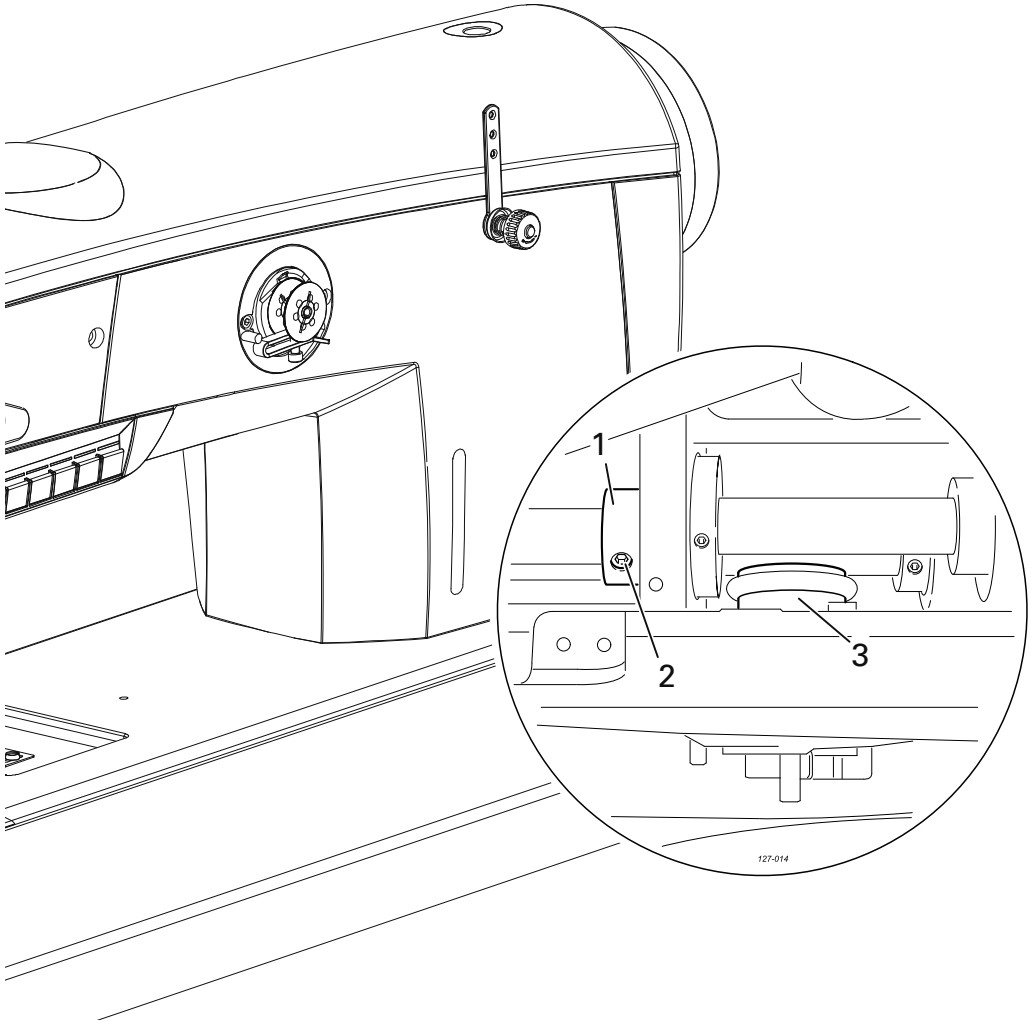

Fig. 1 - 11

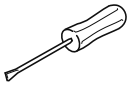

- Adjust drive wheel **1** (screw **2**) in accordance with the **requirement**.

1.05.12 Thread check spring and thread regulator

Requirement

1. The movement of thread regulator **3** must be completed when the needle point enters the material.
2. When the thread loop is at its largest while being passed around the hook, the check thread spring **3** should rise slightly from the rest **1**.

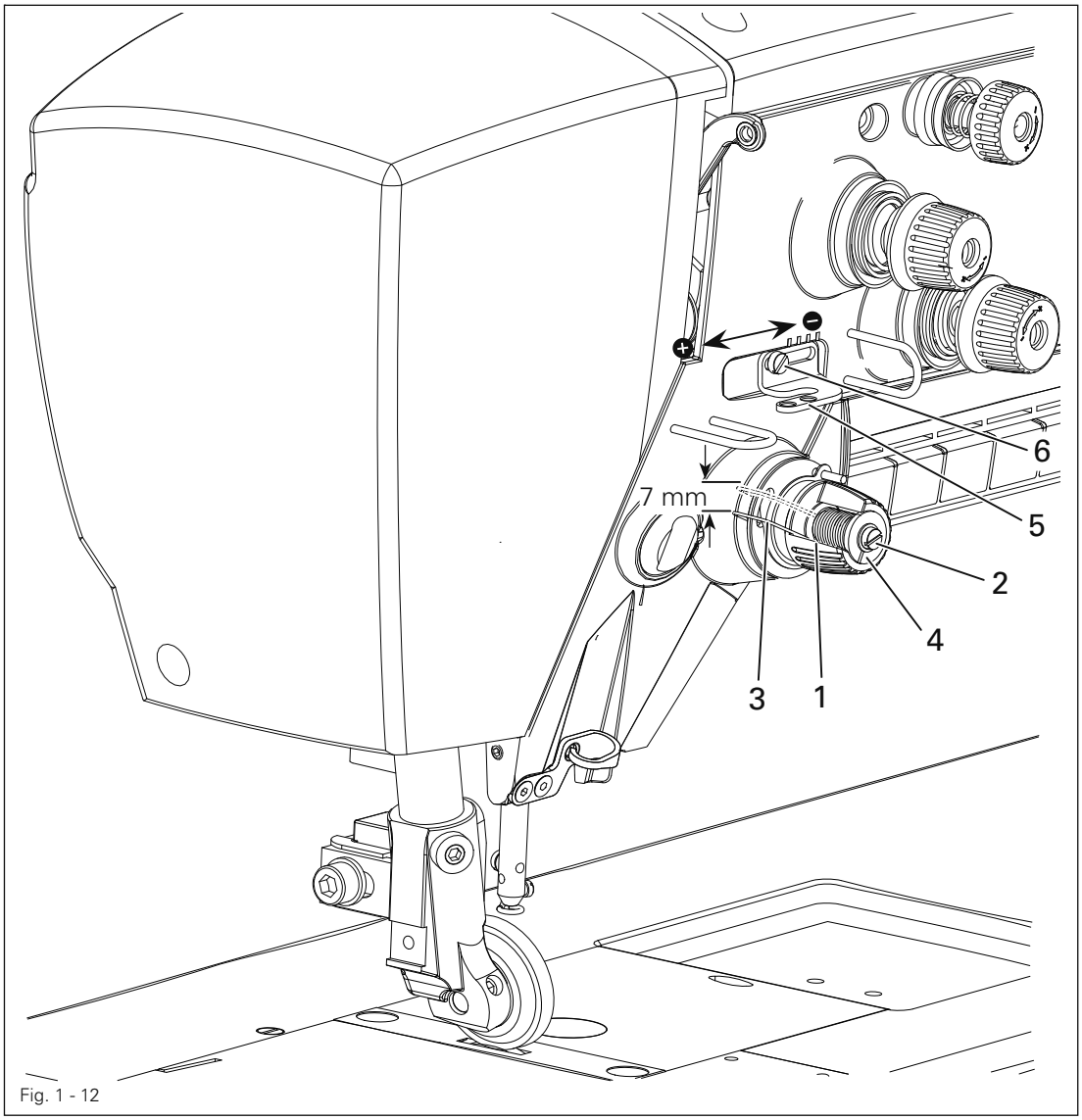

Fig. 1 - 12

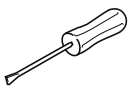

- Position rest **1** (screw **2**) in accordance with **requirement 1**.
- Turn sleeve **4** (screw **2**) to adjust the tension of thread check spring **3**.
- Position thread regulator **5** (screw **6**) in accordance with **requirement 2**.

For technical reasons it may be necessary to deviate from the indicated spring stroke or spring tension.
Move thread regulator **5** (screw **6**) towards ("+") (= more thread) or ("-") (= less thread).

1.05.13 Sewing foot pressure

Requirement

1. The material must be fed smoothly.
2. No pressure marks should be visible on the material.

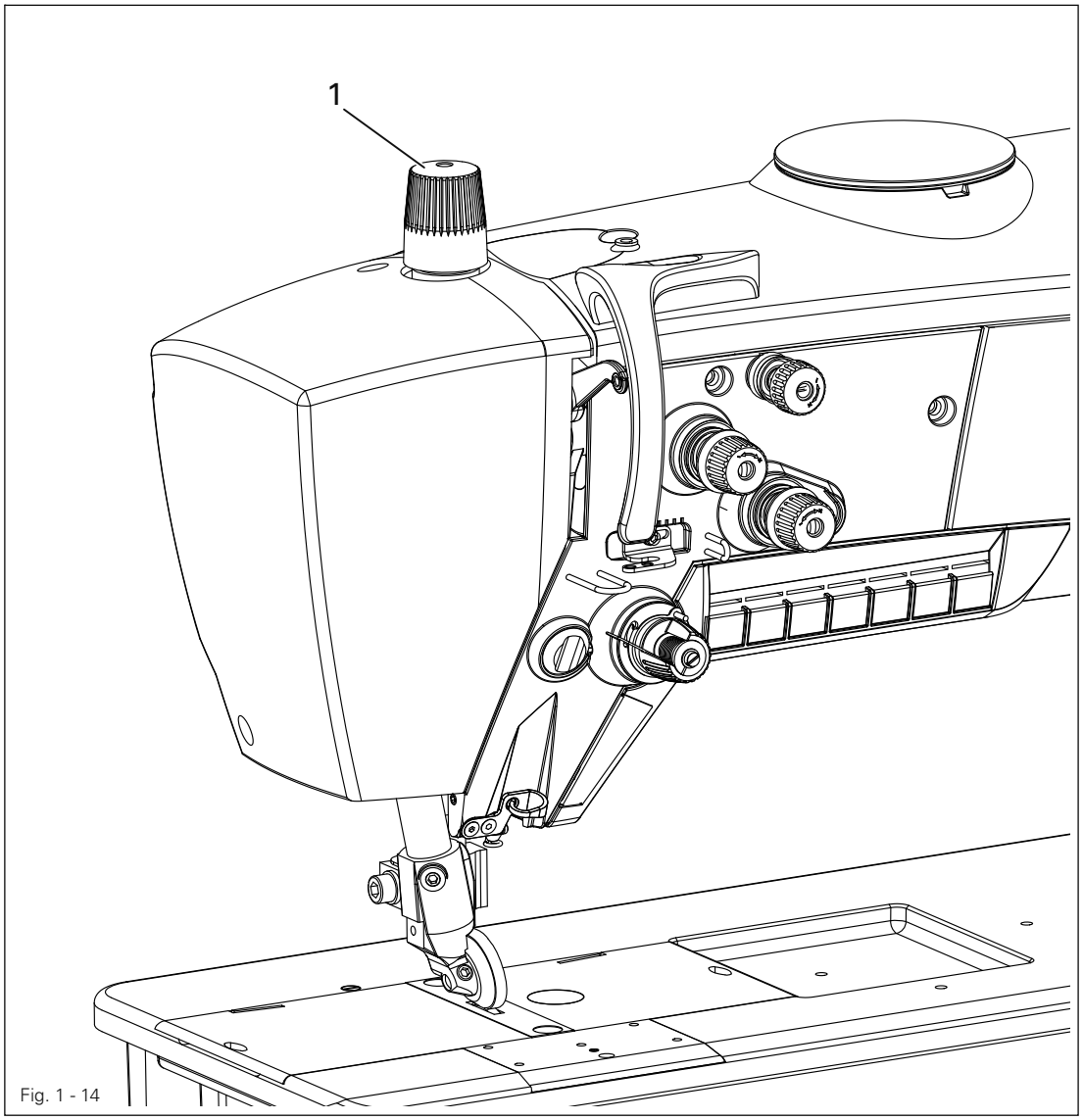

Fig. 1 - 14

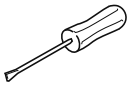

- Turn adjustment screw **1** in accordance with the **requirement**.

1.05.14 Lubrication

Requirement
After a running time of **10** seconds a thin film of oil should be visible on paper strip **1** when this is held over the hook.

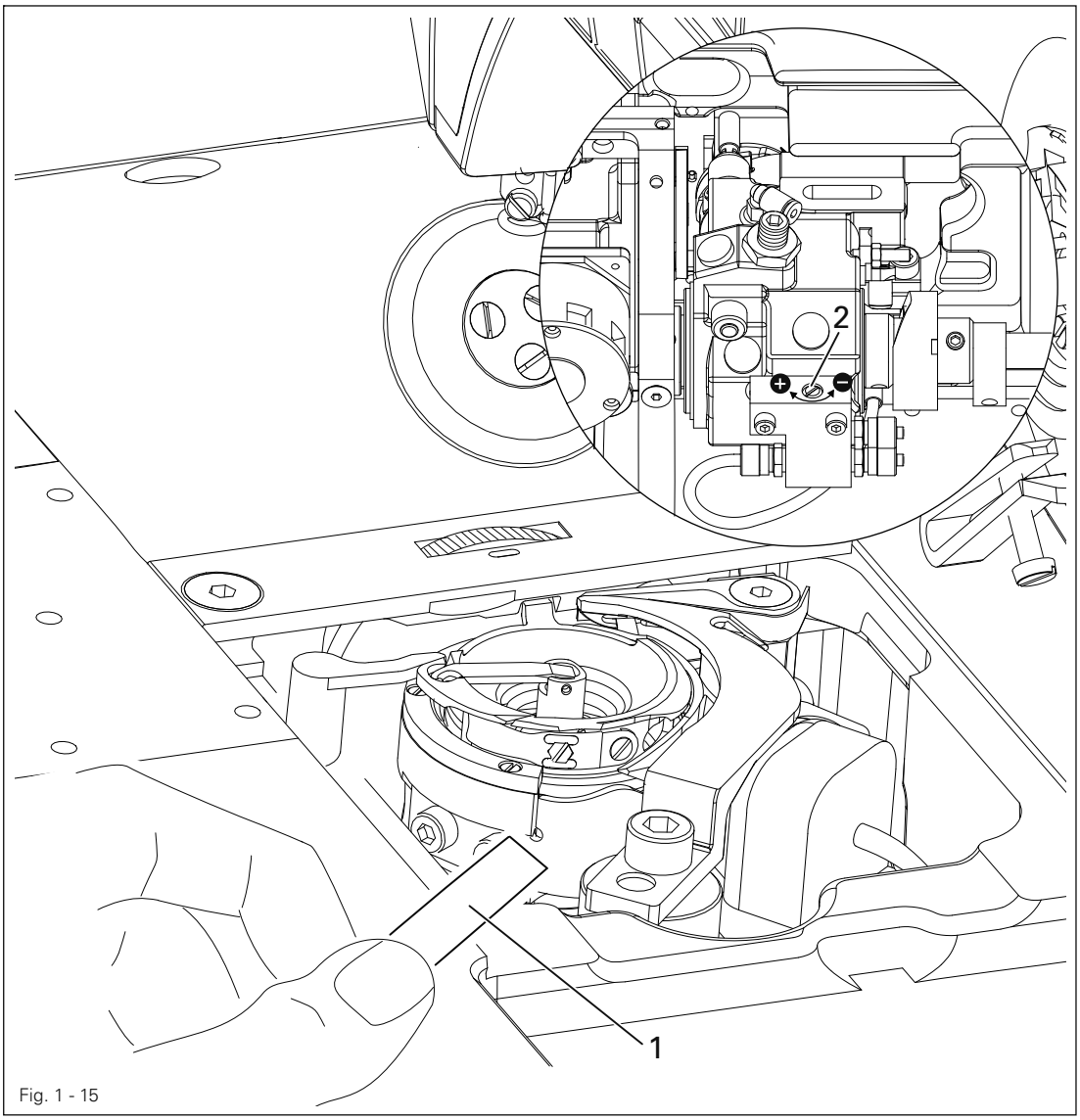

Fig. 1 - 15

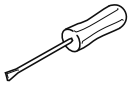

- Check that the machine is filled with oil and that the oil lines are free of air.
- Run the machine for **2 – 3 min**.

Do not put your hands into the needle area when the machine is running!
Danger of injury from moving parts!

- With the machine running, hold paper strip **1** against the hook and check the **requirement**.
- If necessary, regulate amount of oil with screw **2**.

1.05.15 Re-engaging the slip-clutch

Clutch **1** is adjusted at the works. In the case of a thread jamming, clutch **1** will disengage, in order to avoid damage to the hooks.
The following describes how to re-engage clutch **1**.

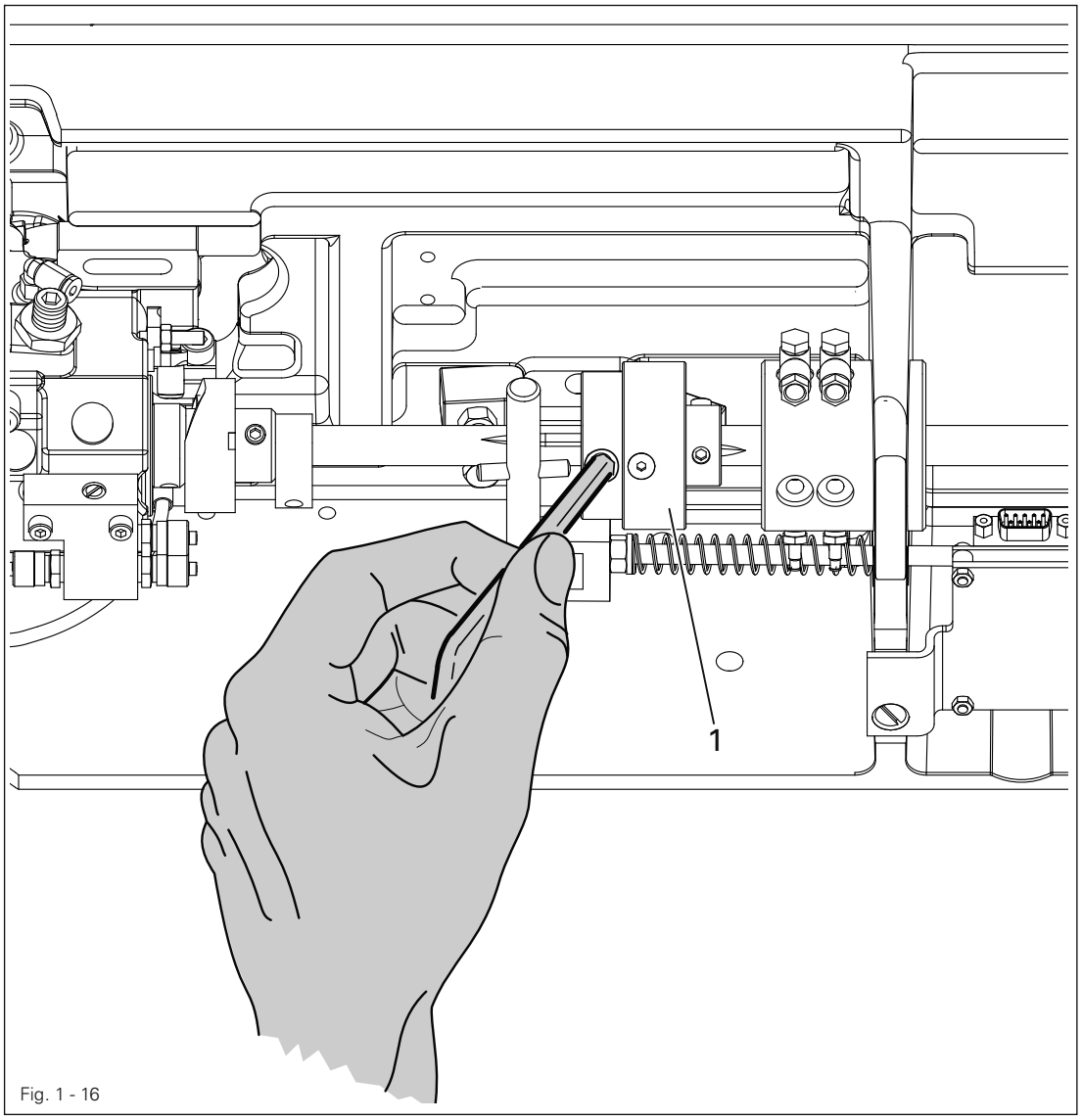

Fig. 1 - 16

- Remedy jammed thread fault.
- Hold clutch **1** firmly, as shown in Fig. **13-22**, and turn the balance wheel until clutch **1** re-engages.

1.06 Adjusting the thread trimmer -900/81

1.06.01 Resting position of roller lever/radial position of control cam

Requirement

1. When the take-up lever is at t.d.c. (balance wheel position **60** °), control cam **1** should just have moved roller lever **5** into its basic position.
2. When the thread trimmer is in its resting position, there should be a clearance of **0.1 mm** between roller lever **5** and control cam **1**.

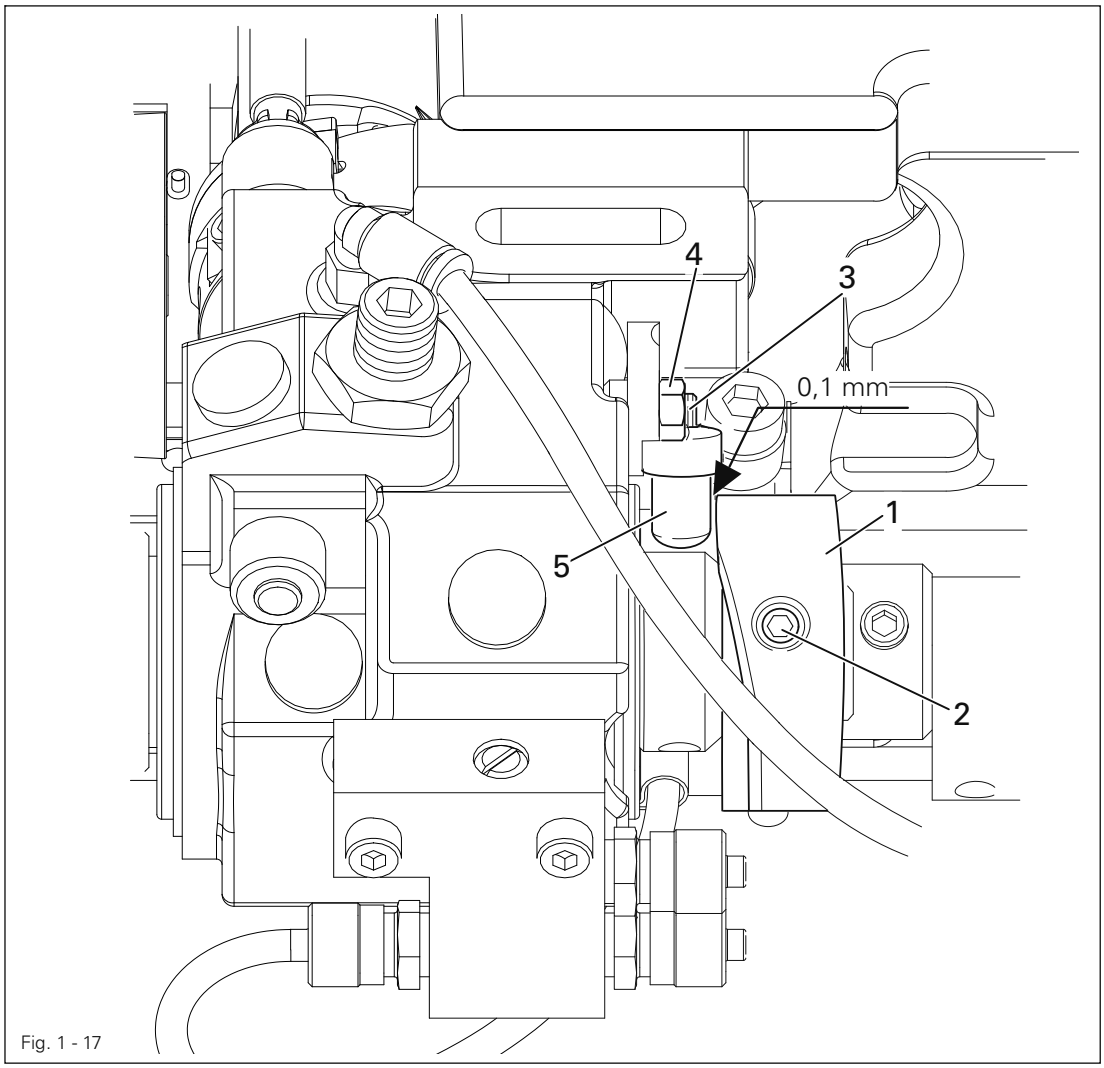

Fig. 1 - 17

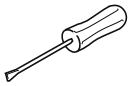

- Adjust control cam **1** (screws **2**) in accordance with **requirement 1**.
- Adjust screw **3** (nut **4**) in accordance with **requirement 2**.

1.06.02 Position and height of the thread catcher

Requirement
When the needle bar is positioned at b.d.c. (balance wheel position **180°**) the edges of thread catcher **3** and knife **5** should be flush (see arrow).

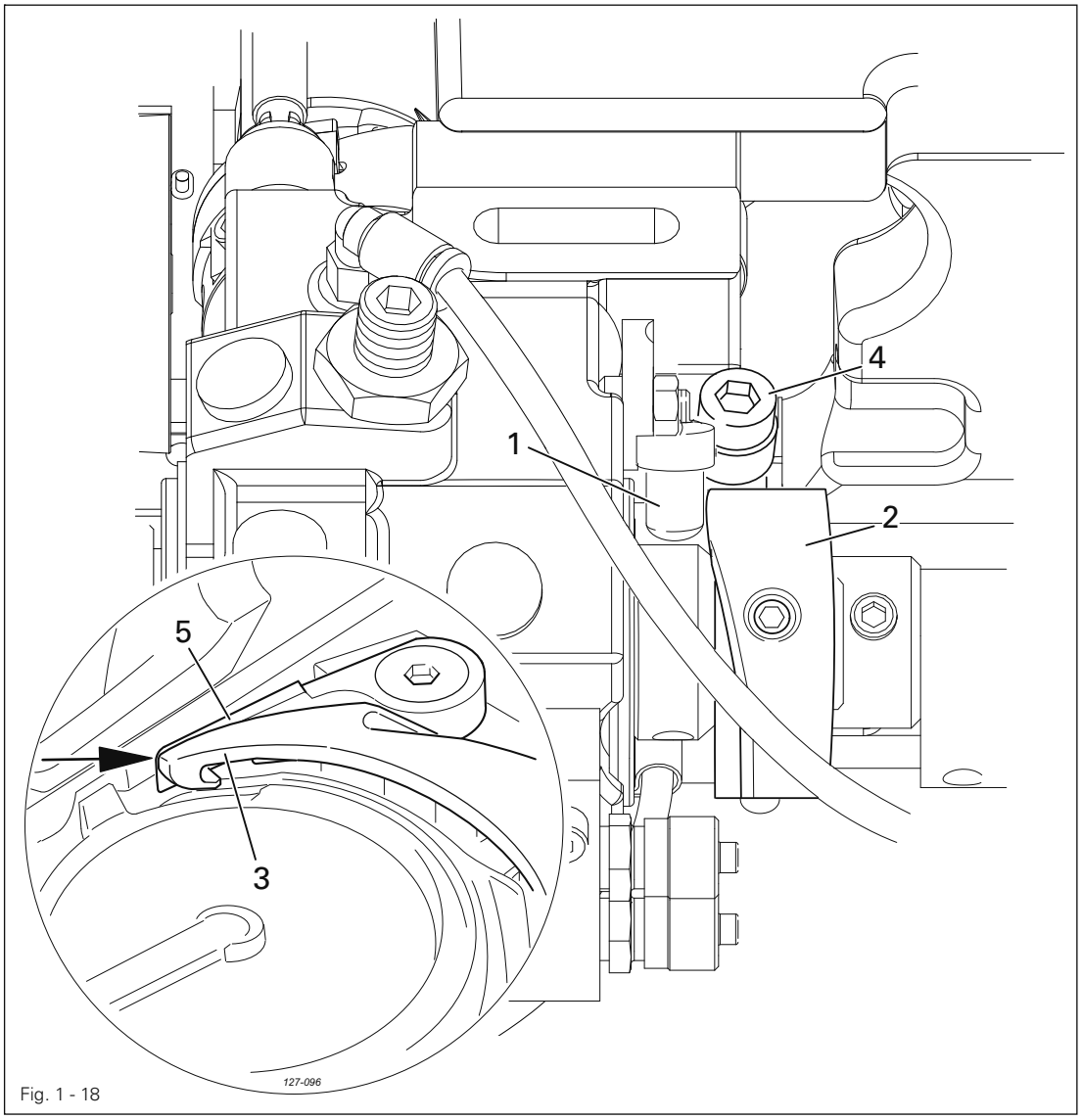

Fig. 1 - 18

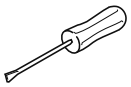

- Press roller lever **1** against control cam **2**.
- Adjust thread catcher **3** (screw **4**) in accordance with the **requirement**

The height of thread catcher **3** is pre-set by the manufacturer and, if necessary, it can be adjusted with washers under thread catcher **3** on the base of the hook bearing.

1.06.03 Knife pressure

Requirement
When the front edge of thread catcher **3** is **5 – 6 mm** in front of the knife blade, the knife **4** should be touching the catcher edge with slight pressure.

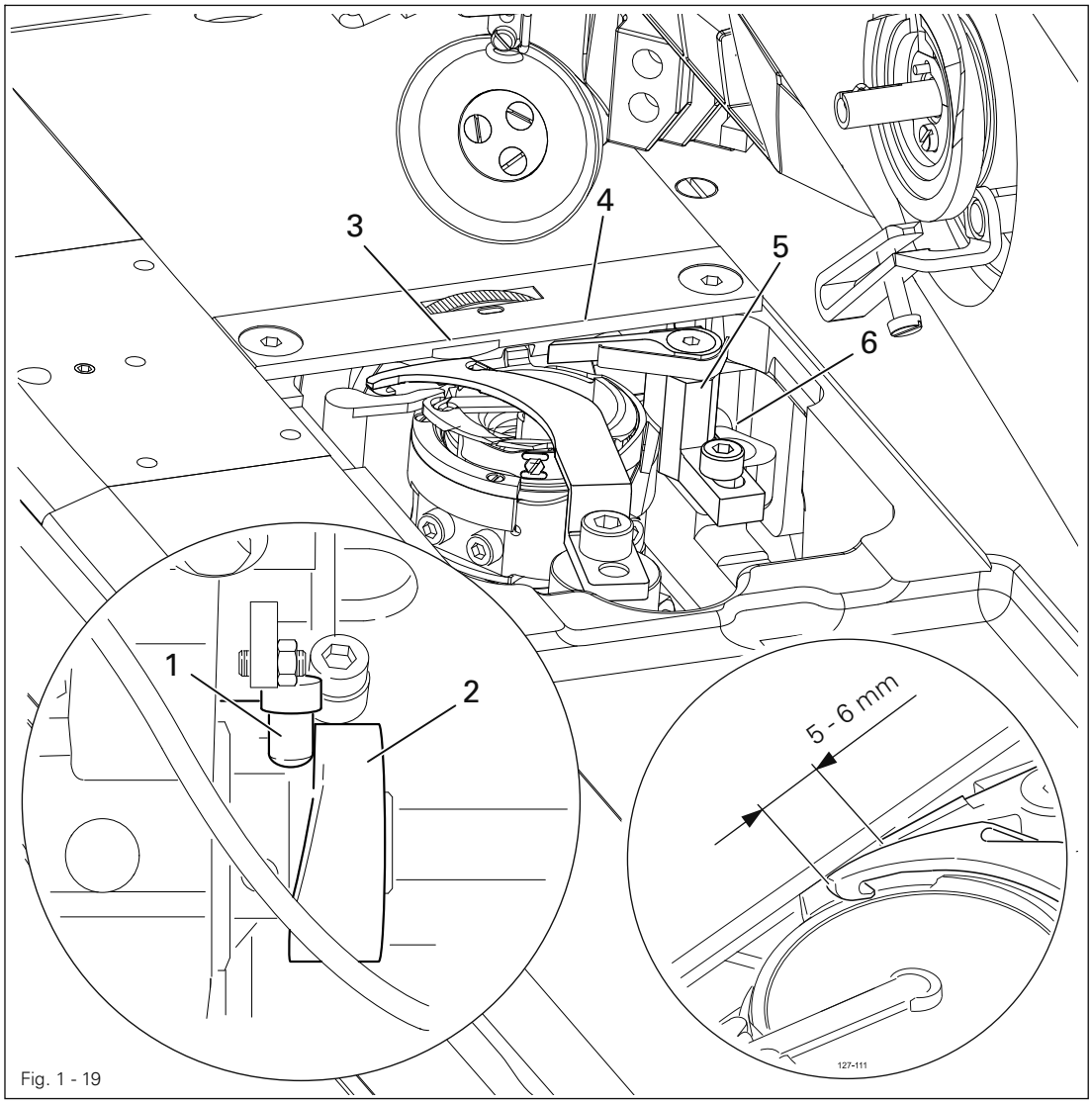

Fig. 1 - 19

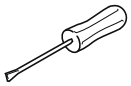

- Bring the take-up lever to its b.d.c and press roller lever **1** into the control cam **2**.
- Turn the balance wheel until the front edge of catcher **3** is at a distance of **5 – 6 mm** from the blade of knife **4**.
- Swing knife bearing **5** (screw **6**) in accordance with the **requirement**.

After completing the adjustment, recheck the position of the thread catcher in accordance with Chapter 1.06.02 **Position and height of the thread catcher**.

1.06.04 Bobbin thread clamp spring

Requirement
When the thread trimmer is in its cutting position, the clamp spring should slightly touch the thread catcher and hold the thread reliably.

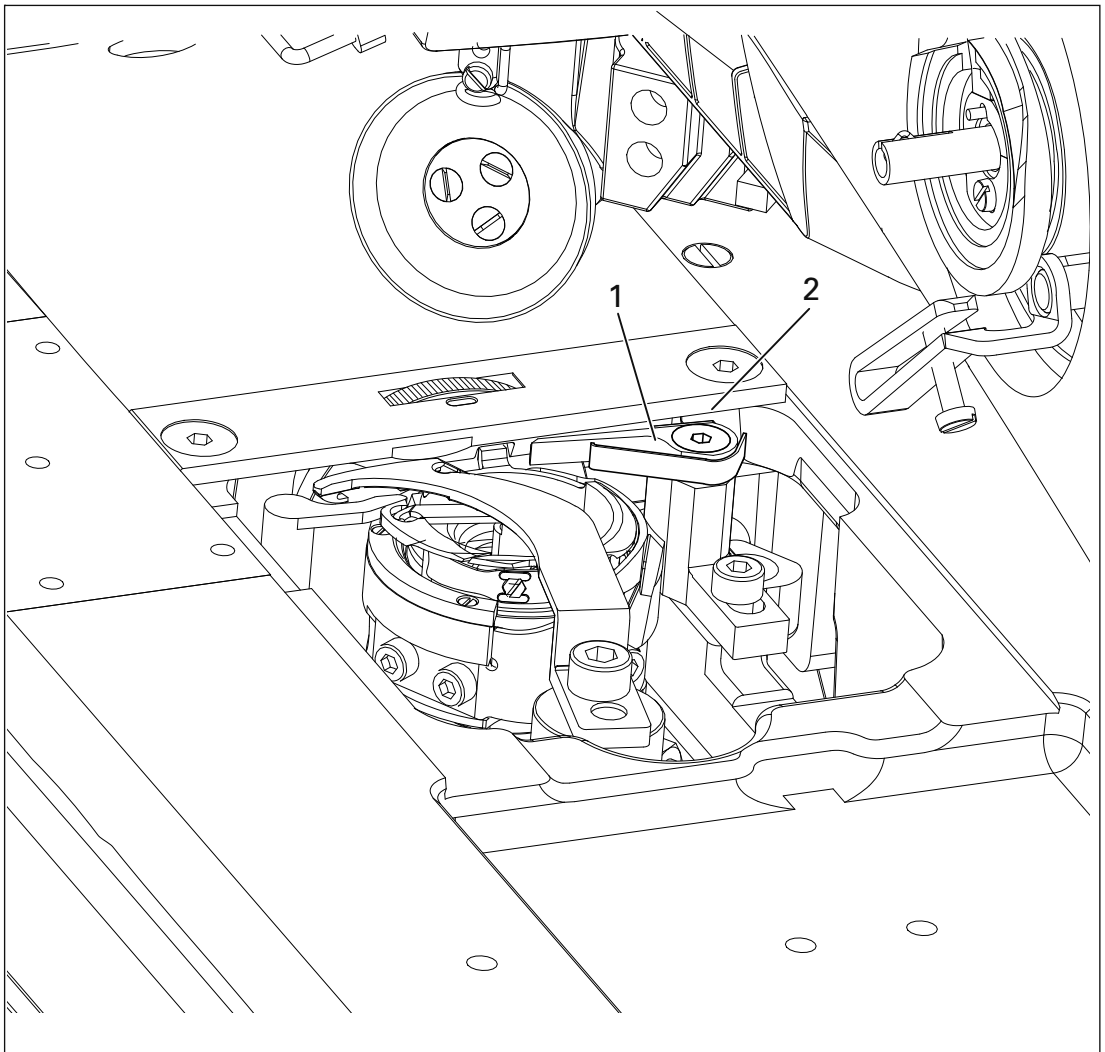

Fig. 1 - 20

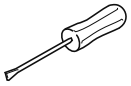

- Adjust clamp spring **1** (screw **2**) in accordance with the **requirement**.
- Carry out the cutting operation by hand and check the setting. Readjust if necessary.

1.06.05 Manual cutting test

Requirement

1. **1**. When moving forward, thread catcher **1** must not move bobbin thread **3**
2. When thread catcher **1** is at its front point of reversal, bobbin thread **3** should be in the centre of the marked area (see arrow).
3. After the cutting operation has been completed, needle and bobbin thread should be cut neatly and bobbin thread **3** held.

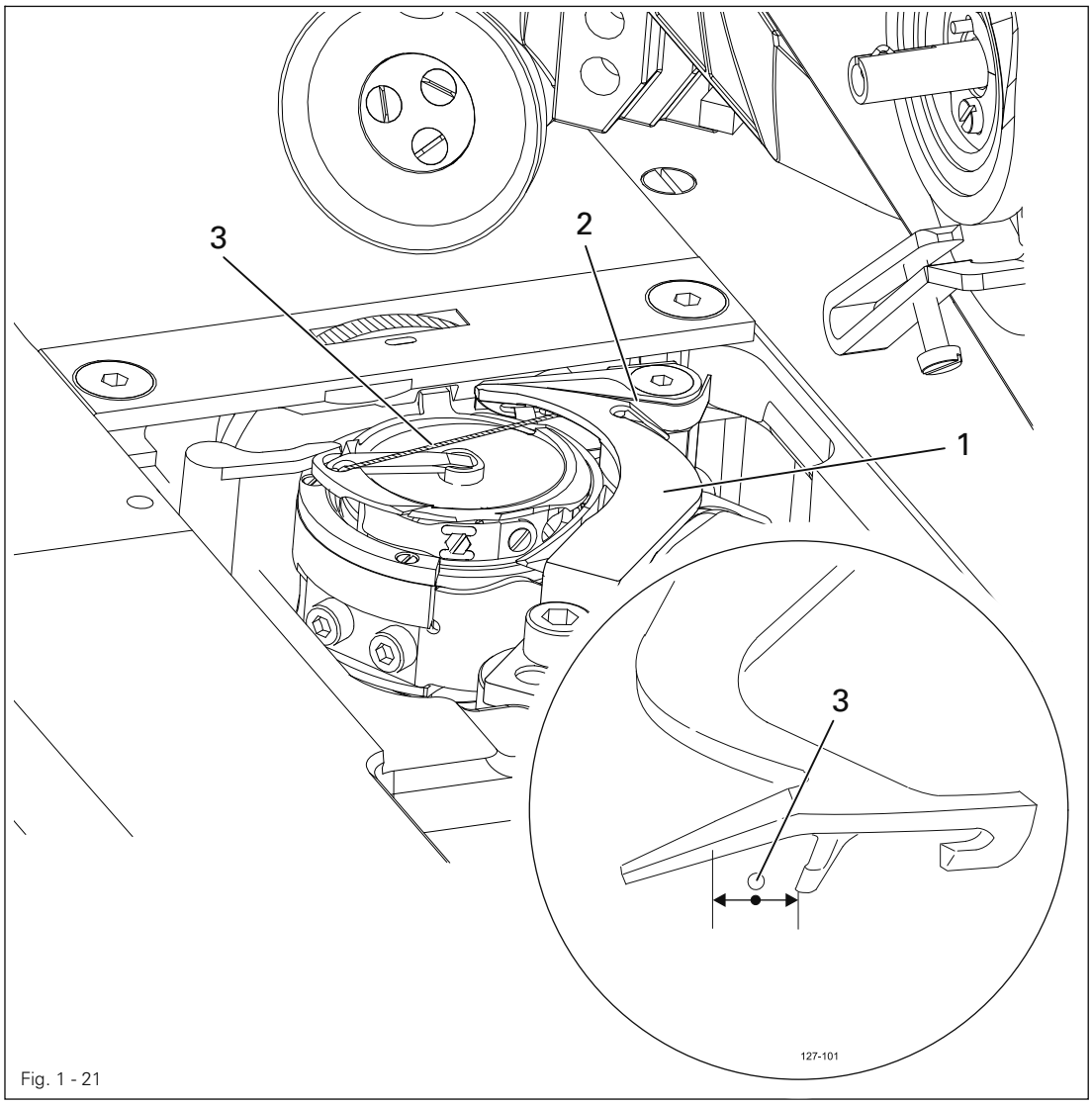

Fig. 1 - 21

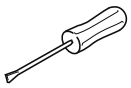

- Sew a few stitches.
- Switch off the main switch and the compressed air.
- Carry out a manual cutting test.
- Check **requirement 1**. If necessary, readjust thread catcher **1** in accordance with Chapter **1.06.02 Position and height of the thread catcher**.
- Check **requirement 3**. If necessary, readjust bobbin thread clamp spring **2** in accordance with Chapter **1.06.04 Bobbin thread clamp spring**.

1.07 List of parameters for control P320 / P321

The parameter "100" is accessible to the operator.
Changing the parameters "**200**" - "**800**" can only be carried out after entering the template code and may only be performed by authorised and qualified personnel.

Group	Parameter	Description	Setting range	Set value
1	101	Pedal controlled start backtack (I = OFF, II = ON)	I - II	I
	102	Reverse rotation (I = OFF, II = ON)	I - II	I
	103	Placed stitch (I = OFF, II = ON)	I - II	I
	104	Bobbin thread monitoring 0 = Off, 1 = Counter, 2 = Thread monitor	0 - 2	0
	105	Bobbin thread counter	0 - 99999	12000
	106	Bobbin thread remaining counter	0 - 999	100
	108	Display main processer software version		
	109	Display step motor processor software version		
	110	Display control panel software version		
	111	Display sewing drive component software version		
	112	Control panel key tone, (I = OFF, II = ON)	I - II	II
	113	Control panel key tone when moving from one area to another, (I = OFF, II = ON)	I - II	I
	115	Thread clamp (I = OFF, II = ON)	I - II	I
	116	Display serial number of machine	-	-
2	201	Machine configuration 10 = 2521, 11 = 2521 with photo cell,	8 - 14	8
	202	Roller-presser field discharge (OFF = I, ON = II) I = roller-presser is lowered slowly. Should be set for high foot pressure II = roller-presser is lowered quickly. Should be set for low foot pressure	I - II	I

Group	Parameter	Description	Setting range	Set value
2	203	Single stitch button assignment 1 = Single stitch, 2 = Needle up, 3 = Knee switch	1 - 3	1
	204	Half stitch button assignment 1 = Half stitch, 2 = Needle up, 3 = Knee switch	1 - 3	1
	206	Open thread tension on stop and lift roller-presser (I = OFF, II = ON)	I - II	I
	207	Open thread tension after trimming and lift roller-presser (I = OFF, II = ON)	I - II	I
3	301	Thread carrier position t.d.c.	0 - 127	124
	302	Needle position under b.d.c.	0 - 127	10
	303	Thread trimmer magnet position on	0 - 127	20
	304	Thread trimmer magnet position pulse	0 - 127	93
	305	Thread trimmer magnet position off	0 - 127	113
	306	Reverse rotation position	0 - 127	93
	307	Placed stitch position	0 - 127	7
	308	Thread tension ventilation position	0 - 127	30
	309	Thread clamp position on	0 - 127	20
	310	Thread clamp position off	0 - 127	60
4	401	Time delay roller-presser lift	0,01s - 1,5s	0,02s
	402	Delayed start after lowering roller-presser	0,01s - 1,5s	0,15s
	403	Set roller-presser lift (must be increased for high foot pressure)	0,01s - 0,2s	0,03s
	404	Thread trimmer magnet pulse	10 -50%	35%
	405	Time to clean the bobbin thread monitor	0,01s - 1,5s	0,25s
5	501	Maximum speed	100 - 3500	3500
	502	Start backtack speed	100 - 1500	700
	503	End backtack speed	100 - 1500	700
	504	Soft start speed	100 - 3500	1500
	505	Soft start stitch	0 - 15	0
	601	Move roller-presser and feed wheel step motor		

Group	Parameter	Description	Setting range	Set value
6	602	Inputs: 0123456789ABCDEF 0 = Needle mid point (E16) 1 = Needle mid point (E15) 2 = Intermittent coding (E14) 3 = Free (E13) 4 = Free (E12) 5 = Free (E11) 6 = Free (E10) 7 = Free (E9) 8 = Emergency button (E8) 9 = Bobbin thread counter (E7) A = Knee switch (E6) B = Photo cell (E5) C = Starting inhibitor (E4) D = Free (E3) E = Free (E2) F = Free (E1)		
	603	Machine drive in home position see set-up-instructions	0 - 127	8 ± 2
	604	Run cold start		
	605	Stitch process with step motors by handwheel		
	606	Display speed control unit value		
	701	P-section speed regulator	1 - 50	30
	702	I-section speed regulator	0 - 100	50
	703	P-section position regulator	1 - 50	20
	704	D-section position regulator	1 - 100	30
	705	Time for position regulator	0 - 100	25
	706	P-section position regulator for remainder brake	1 - 50	25
	707	D-section position regulator for remainder brake	1 - 50	15
	708	Maximum torque for remainder brake	0 - 100	0
	709	Minimum machine speed	3 - 64	6
	710	Maximum machine speed	1 - 35	35
	711	Maximum motor speed	1 - 35	35
	712	Positioning speed	3 - 25	18
	713	Acceleration ramp	1 - 50	35
	714	Braking ramp	1 - 50	30

Group	Parameter	Description	Setting range	Set value
7	715	Reference position	0 - 127	10
	716	Dead man time	0 - 255	40
	717	Motor starting current	3 -10	8
	718	Vibration filter	1 -10	6
	719	Assign direction of rotation	0 - 1	0
	720	Move positioner	1 - 2	2
8	801	Function group 100 access authorisation (Operator level)	0 - 1	0
	802	Function group 200 access authorisation (Technician level)	0 - 1	1
	803	Function group 300 access authorisation (Sewing motor positions)	0 - 1	1
	804	Function group 400 access authorisation (Times)	0 - 1	1
	805	Function group 500 access authorisation (Counter and revolution speed)	0 - 1	1
	806	Function group 600 access authorisation (Service)	0 - 1	1
	807	Function group 700 access authorisation (Sewing motor)	0 - 1	1
	808	Function group 800 access authorisation (Access authorisation)	0 - 1	1
	809	Programming access authorisation	0 - 1	1
	810	Input access code	0 - 9999	2500

1.08 Error Messages and Description

Error	Description
E 1	System error
E 2	Sewing motor E002/BB/xxx BB = 20: Deadman 02: Position forwards 03: Position in reverse 05: Position by shortest route 09: Write parameter 10: Speed 0A: Reset stitch counter 0B: Stop after xxx stitches 30: Timeout for increasing speed 31: Timeout from uncertain positioning 32: Timeout from deadman command 33: Timeout for deleting errors 34: Timeout for emergency stop 35: Timeout for writing parameters 36: Timeout for resetting stitch counter 37: Timeout for stop command after x stitches 38: Timeout for initialisation 39: Establishing contact when turned on xxx = sewing motor control unit error byte (see Motor Errors)
E 3	Section
E 4	End of section
E 5	Pedal or half stitch button or single stitch button (on machine head) activated when machine turned on
E 6	Communication error with the step motor processor
E 7	End of ramp
E 8	Needle drive end point not found
E 9	Needle drive mid-point not found
E 10	Step motor processor error
E 11	Step motor step frequency too high
E 12	Sewing displacement error
E 13	Docu-seam system error
E 14	Incorrect program number (larger than 99)
E 15	Incorrect section number
E 16	Memory full
E 17	Incorrect stitch length
E 18	Unused
E 19	External control interface
E 20	Incorrect control
E 21	Power supply unit overloaded (24V)
E 22	Mains voltage
E 23	Power supply 24V too low

Error	Description
	Error in SD-memory card reader
Error 27 - 1	No SD-memory card inserted
Error 27 - 2	Wrong card (does not match the 2521)
Error 27 - 3	Card not inserted correctly
Error 27 - 4	Card with write protection
Error 27 - 5	Data error on SD-memory card
Error 27 - 6	Formatting failed
Error 27 - 7	File does not match the 2521
Error 27 - 8	Incorrect file size
Error 27 - 9	Transfer error
Error 27 - 10	Data could not be deleted

1.09 Motor Errors

Error	Description
33	Invalid parameter value
35	Communication error
36	Init not ready
37	Command overrun
64	Mains off during initialisation
65	Excess current directly after mains on
66	Short circuit
68	Excess current during operation
70	Motor blocked
71	No incremental plug
74	Incremental transducer missing for transmission/reduction
173	Motor blocked in 1st stitch
175	Interior starting error
222	Dead man monitoring

1.10 Updating the machine software via internet

The machine software can be updated with PFAFF flash programming. For this purpose the PFP boot program (from **version 3.25** on) and the appropriate control software for the machine type must be installed on a PC. The transfer of the data to the machine can be carried out with a null modem cable (part no. **91-291 998-91**) or with an SD-card. The SD-card must be formatted in the **FAT**16 format and must not exceed a capacity of 2 **GBytes**.

The PFP boot program and the control software of the machine type can be downloaded from the PFAFF-homepage using the following path:
www.pfaff-industrial.de/pfaff/de/partnerweb/downloadsoftware

1.10.01 Updating 2521 with null modem cable

- After downloading the PFP tool and the control software, open the PFP program.
- Select the **machine type** and under control unit **P321**.
- The software version is displayed under **report**.

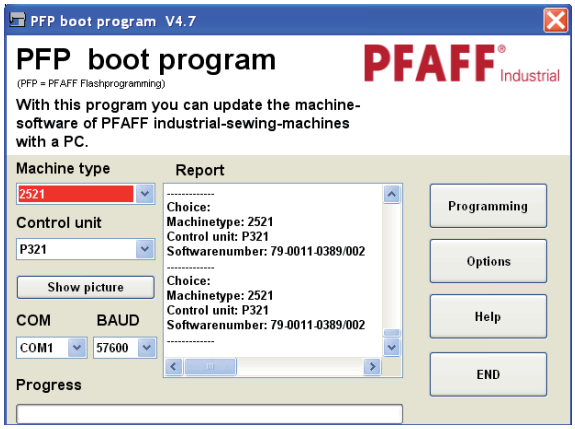

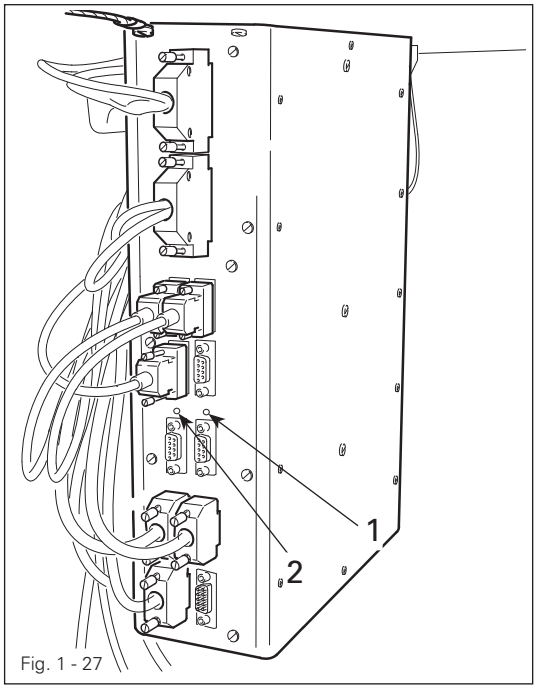

Fig. 1 - 27

- Switch off the machine.
- Connect the PC (serial interface or appropriate USB-adapter) and the machine control unit (**RS232**). To do so disconnect the plug of the control panel.

While the machine software is being updated, no setting up, maintenance or adjustment work may be carried out on the machine!

- Depending on which software is to be up-dated, hold down boot key **1** or **2** and switch on the machine.
  - **1** = for machine controller
  - **2** = for stepping motors

- Press the "OK" button.

- The software update is carried out, the update progress is shown on the bar display of the PFP boot program.
- During the up-dating procedure the machine must not be switched off.
- When the update has been completed, switch off the machine and end the PFP boot program.
- End the connection between the PC and the machine control unit and reconnect the control panel to the machine control unit.
- Switch on the machine.
  A plausibility control is carried out and, if necessary, a cold start.

More information and assistance is at your disposal in the file "PFPHILFE.TXT", which can be called up from the PFP boot program by pressing the "help" button

1.10.02 Updating 2521with SD card

- After downloading the PFP tool and the control software, open the PFP program.
- Select the machine type and under control unit SD-CARD.
- The software version is displayed under report.

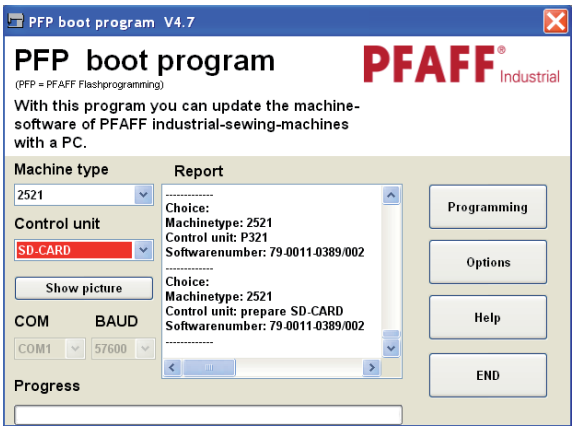

- Under **programming** copy the software to the drive with the SD-card.
- With the machine switched off insert the SD-card into the control panel.

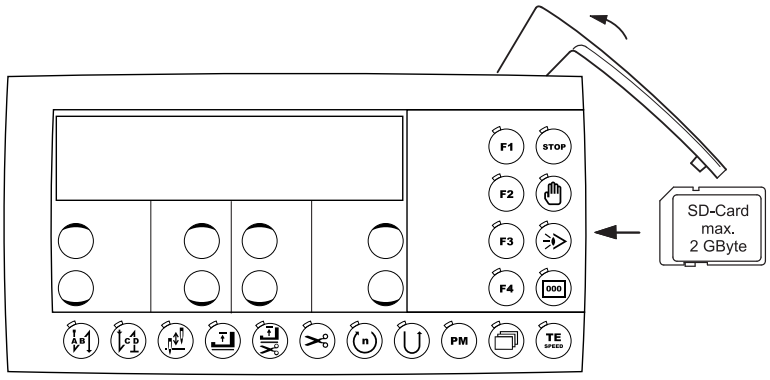

To update the machine software carry out the following steps:

While the machine software is being updated, no setting up, maintenance or adjustment work may be carried out on the machine!

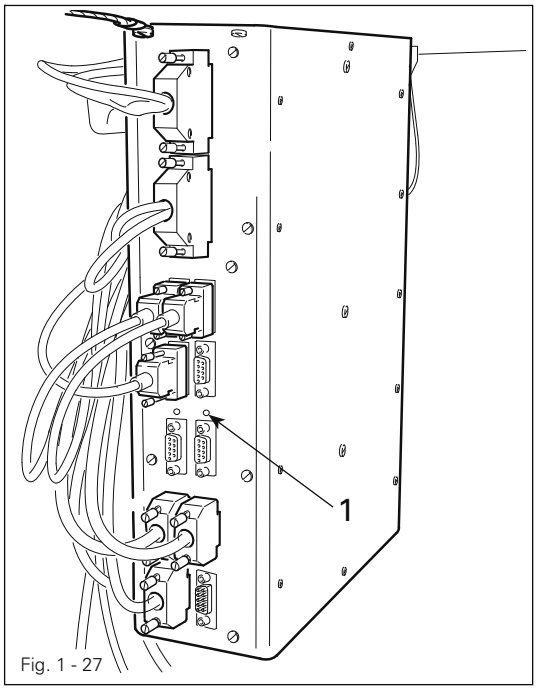

Fig. 1 - 27

- witch on the machine, keeping the boot key **1** pressed.
- Press the "TE" key.
  The software update is carried out. During the updating process the diode in the memory card slot flashes.
- During the updating process the machine must not be switched off.
- When the update has been completed, switch off the machine and remove the SD-card.
- Switch on the machine
- A plausibility control is carried out and, if necessary, a cold start.
- To update the step motor software please contact your PFAFF representative.

More information and assistance is at your disposal in the file "PFPHILFE.TXT", which can be called up from the PFP boot program by pressing the "help" button.

2 Circuit diagrams

Reference list for circuit diagrams 91-191 555-95

A1	Control device P 321
A2	Control panel BDF-S3
A14	Sewing head detection (OTE)
A15	Oil sensor- PBC
A16	Keyboard (8er)
A20.O	Optic bobbin thread monitor
A20.V	Amplifier bobbin thread monitor
A50	CAN- I²C converter
B41	Oil sensor
H1	Sewing lamp (LED)
M1	Sewing motor
M2	Step motor feed wheel
M3	Step motor roller-presser
M4	Step motor needle
Q1	Main switch
R1	Treadle speed control unit
R2	Pull-up (6,8 k Ohm)
R3	Pull-down (1,2 K Ohm)
S1	1.Key keyboard
S2	2.Key keyboard
S3	3.Key keyboard
S4	4.Key keyboard
S5	5.Key keyboard
S6	6.Key keyboard
S7	7.Key keyboard
S8	8.Key keyboard
S24	Key approach barrier
S26	Knee switch
X1	Mains plug
X1A	RS232 – Interface 1 Control panel BDF-S3
X1B	VSS OTE
X3	Incremental encoder (sewing motor)
X4A	Feed wheel step motor
X4B	Roller-presser step motor
X5	Inputs
X6A	Step motor needle
X6B	RS 232 (Program)
X8	Sewing motor
X11A	CAN interface
X11B	Treadle nominal value transmitter
X13	Outputs
XA14	I²C- BUS (free)
XA15.1	I²C- BUS oil sensor PCB
XA15.2	I²C- BUS oil sensor PCB
XA16	I²C- BUS keyboard (8er)
XA20	Output bobbin thread monitor
XE20	Input bobbin thread monitor
XA20.1	Amplifier bobbin thread monitor
XA20.2	Optic bobbin thread monitor
XA50.1	I²C- BUS converter
XA50.2	CAN- BUS converter
X41	Y1 -910/.. PFA
X42	Y2 -900/.. Thread cutter
X44	Y4 1. Thread tension
X46	Y6 Gripper cleaning for bobbin thread monitor (Option)
X49	Y9 2. Thread tension
Y1	-910/.. PFA
Y2	-900/.. Thread cutter
Y4	1. Thread tension
Y6	Gripper cleaning for bobbin thread monitor (Option)
Y9	2. Thread tension

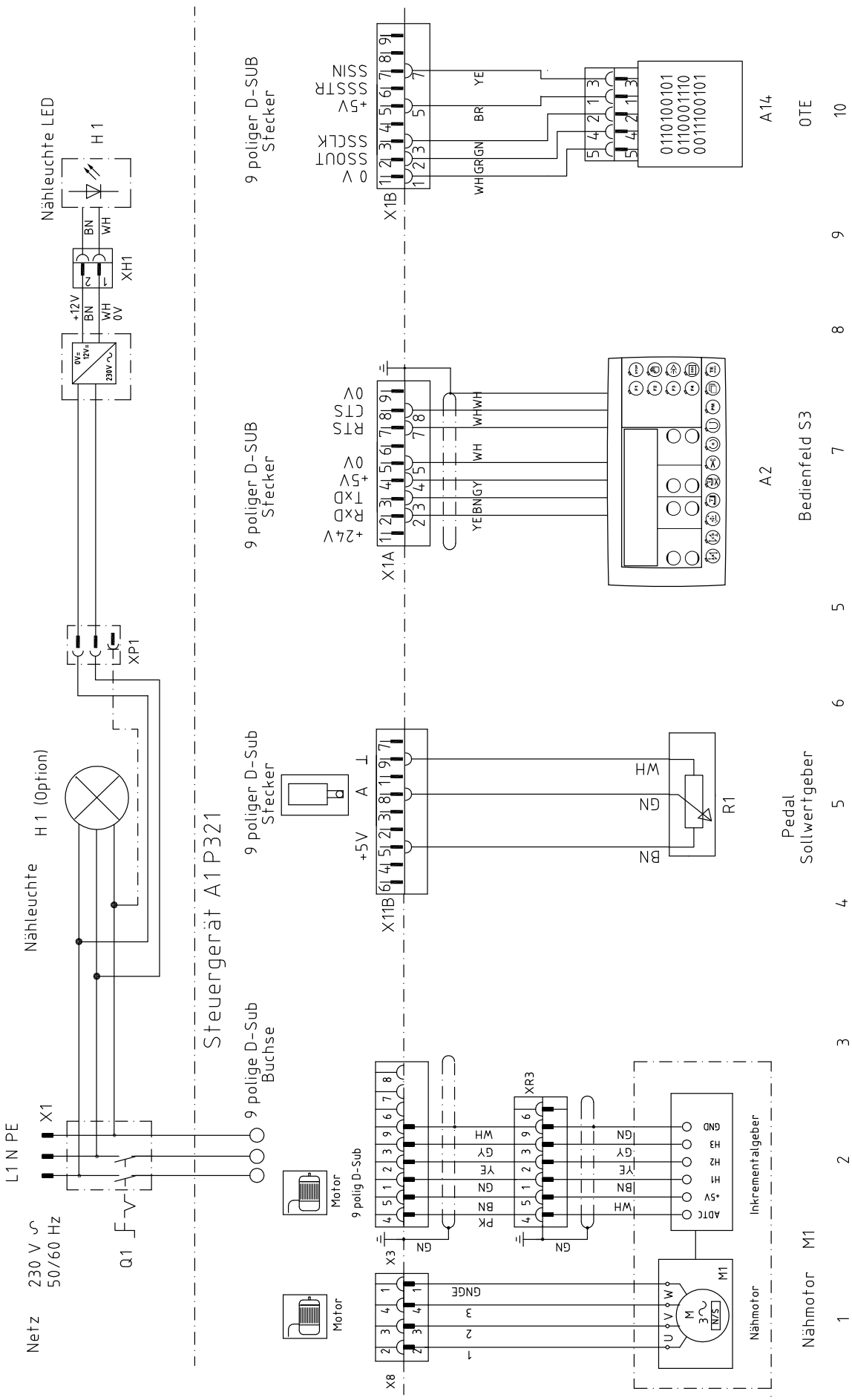
Netz
230 V ∿
50/60 Hz
L1 N PE
X1
Q1
Nähleuchte
H 1 (Option)
XP1
Nähleuchte LED
H 1
XH1
+12V
BN
WH
0V
230V ∿
0V=
12V=
Steuergerät A1 P321
9 polige D-Sub Buchse
Motor
9 polig D-Sub
X8
X3
GNGE
U
V
W
GN
XR3
M1
M
3~
N/S
Nähmotor
Inkrementalgeber
ADTC
+5V
H1
H2
H3
GND
GY
YE
BN
PK
WH
9 poliger D-Sub Stecker
X11B
+5V
A
⊥
R1
Pedal
Sollwertgeber
X1A
+24V
TxD
RxD
+5V
0V
CTS
RTS
YE
BN
GY
WH
A2
Bedienfeld S3
X1B
0 V
SSOUT
SSCLK
+5V
SSSTR
SSIN
GR
BR
0110100101
0110001110
0011100101
A14
OTE
1
2
3
4
5
6
7
8
9
10

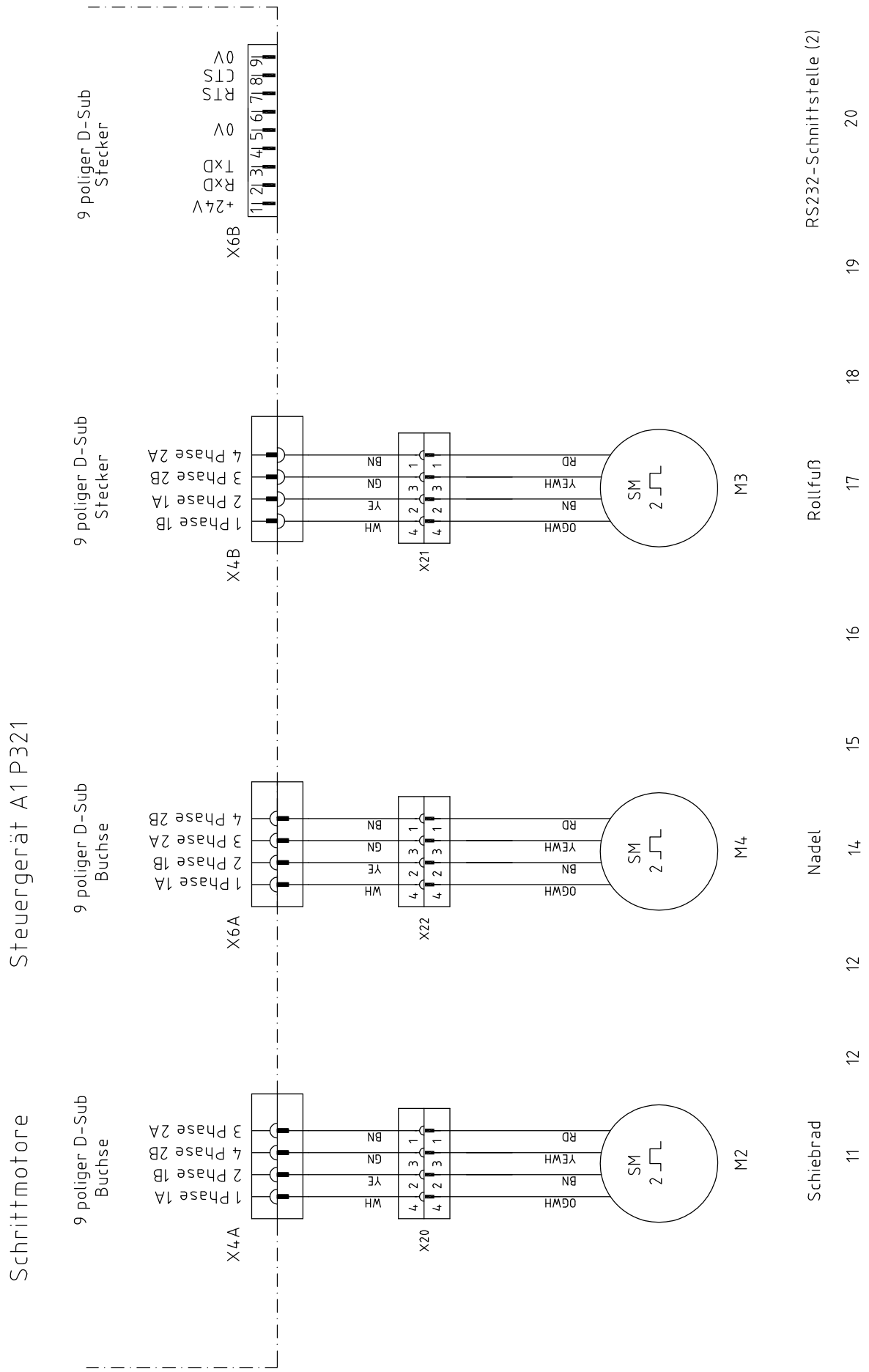
Steuergerät A1 P321
Schrittmotore
9 poliger D-Sub Buchse
X4A
1 Phase 1A
2 Phase 1B
4 Phase 2B
3 Phase 2A
X20
WH
YE
GN
BN
OGWH
BN
YEWH
RD
SM
M2
Schiebrad
11
12
9 poliger D-Sub Buchse
X6A
1 Phase 1A
2 Phase 1B
4 Phase 2B
3 Phase 2A
X22
WH
YE
GN
BN
OGWH
BN
YEWH
RD
SM
M4
Nadel
12
14
15
9 poliger D-Sub Stecker
X4B
1 Phase 1B
2 Phase 1A
3 Phase 2B
4 Phase 2A
X21
WH
YE
GN
BN
OGWH
BN
YEWH
RD
SM
M3
Rollfuß
16
17
18
9 poliger D-Sub Stecker
X6B
+24V
RxD
TxD
0V
RTS
CTS
0V
1 2 3 4 5 6 7 8 9
RS232-Schnittstelle (2)
19
20

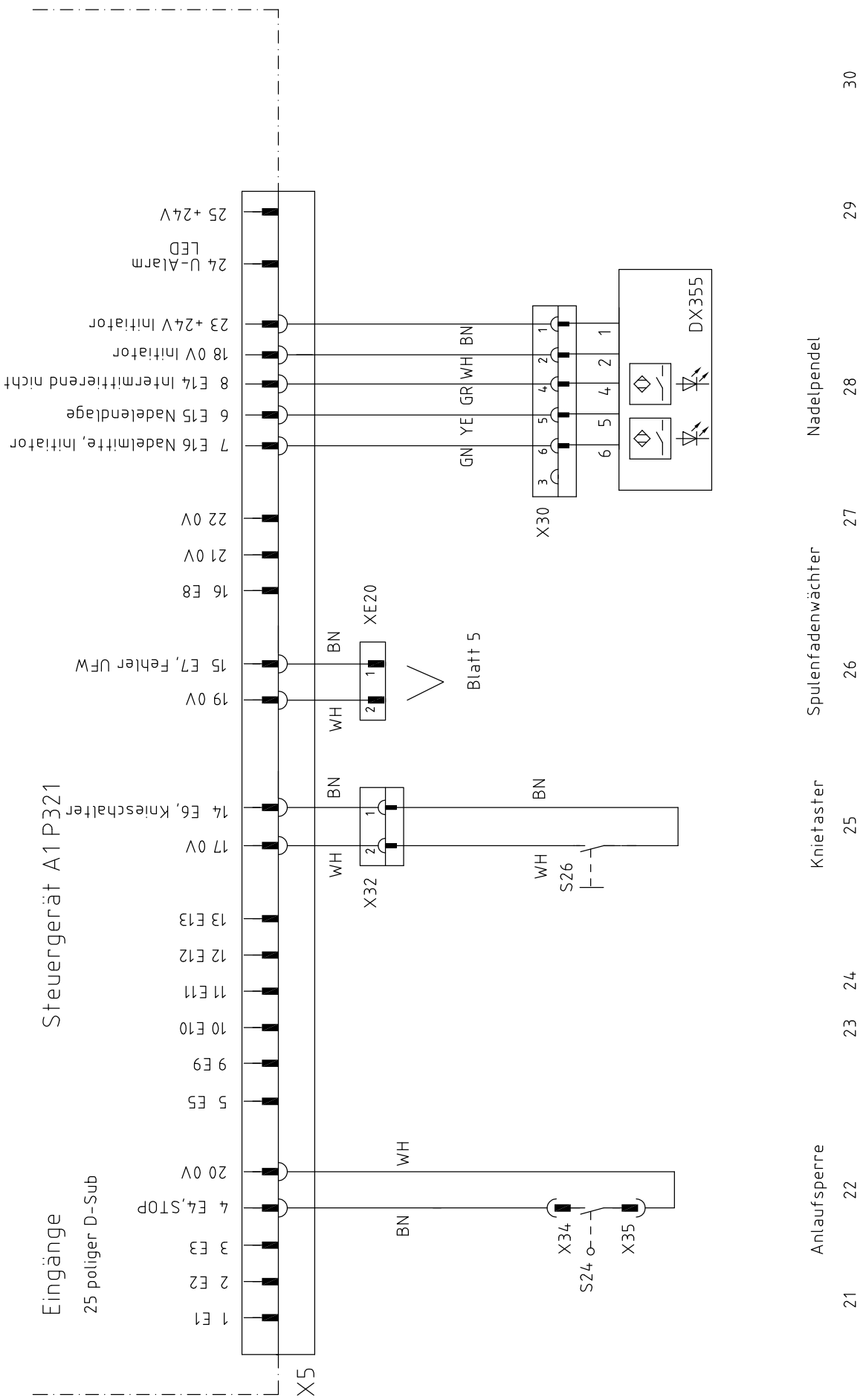
Steuergerät A1 P321
Eingänge
25 poliger D-Sub
X5
1 E1
2 E2
3 E3
4 E4,STOP
20 0V
5 E5
9 E9
10 E10
11 E11
12 E12
13 E13
14 E6, Kniesschalter
17 0V
19 0V
15 E7, Fehler UFW
16 E8
21 0V
22 0V
7 E16 Nadelmitte, Initiator
6 E15 Nadelendlage
8 E14 Intermittierend nicht
18 0V Initiator
23 +24V Initiator
24 U-Alarm LED
25 +24V
WH
BN
X32
XE20
Blatt 5
X30
GN YE GR WH BN
DX355
S26
X34
S24
X35
Anlaufsperre
Kniestaster
Spulenfadenwächter
Nadelpendel
21 22 23 24 25 26 27 28 29 30

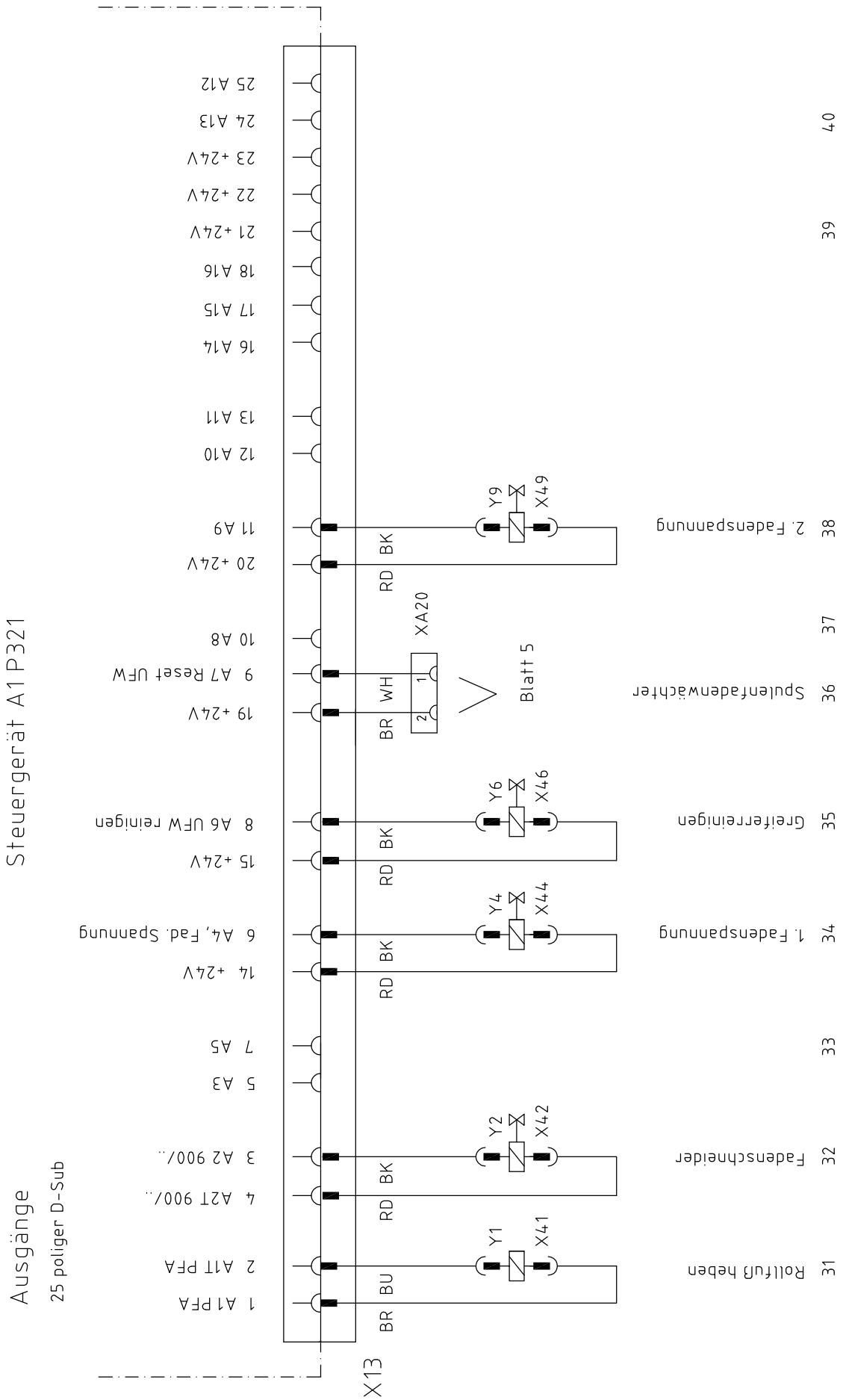
Steuergerät A1 P321
Ausgänge
25 poliger D-Sub
X13
1 A1 PFA
2 A11 PFA
4 A2T 900/..
3 A2 900/..
5 A3
7 A5
14 +24V
6 A4, Fad. Spannung
15 +24V
8 A6 UFW reinigen
19 +24V
9 A7 Reset UFW
10 A8
20 +24V
11 A9
12 A10
13 A11
16 A14
17 A15
18 A16
21 +24V
22 +24V
23 +24V
24 A13
25 A12
BR
BU
RD
BK
WH
XA20
Y1
X41
Y2
X42
Y4
X44
Y6
X46
Y9
X49
Blatt 5
31 Rollfuß heben
32 Fadenschneider
33
34 1. Fadenspannung
35 Greiferreinigen
36 Spulenfadenwächter
37
38 2. Fadenspannung
39
40

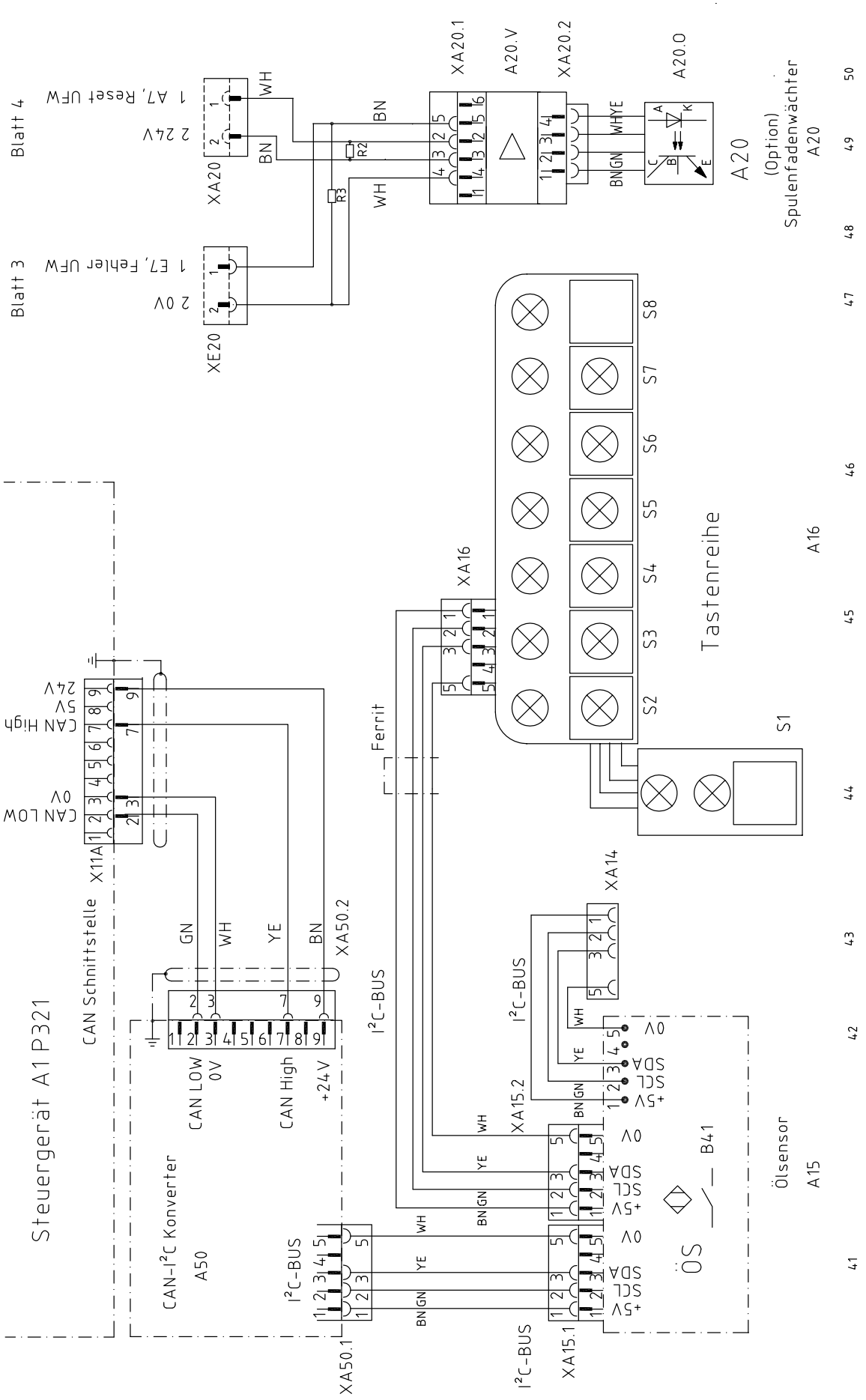
Blatt 4
1 A7, Reset UFW
2 24V
XA20
Blatt 3
1 E7, Fehler UFW
2 0V
XE20
XA20.1
A20.V
XA20.2
A20.O
A20
(Option)
Spulenfadenwächter
A20
Tastenreihe
A16
S1
S2
S3
S4
S5
S6
S7
S8
XA16
Ferrit
Steuergerät A1 P321
CAN Schnittstelle
X11A
CAN LOW
0V
CAN High
5V
24V
XA50.2
CAN LOW
0V
CAN High
+24 V
CAN-I²C Konverter
A50
I²C-BUS
XA50.1
XA14
XA15.2
XA15.1
B41
ÖS
Ölsensor
A15

PFAFF® Industrial

Europäische Union
Wachstum durch Innovation – EFRE

PFAFF Industriesysteme
und Maschinen AG

Hans-Geiger-Str. 12 - IG Nord
D-67661 Kaiserslautern

Phone: +49-6301 3205 - 0
Fax: +49-6301 3205 1386
E-mail: info@pfaff-industrial.com

Made by PFAFF in Germany

Printed in Germany